DA NANG UNIVERSITY OF SCIENCE AND TECHNOLOGY

FACULTY OF MECHANICAL ENGINEERING

GRADUATION THESIS

CAPSTONE PROJECT

MAJOR: AEROSPACE MECHANICAL ENGINEERING

DESIGN OF THE MANUFACTURING AND ASSEMBLY PROCESS FOR THE AIRCRAFT LANDING GEAR ASSEMBLY

Supervisor	**: Dr. Vo Tran Anh**
Reviewer	**: Assoc. Prof. Dr. Tao Quang Bang**
Student	**: Nguyen The Phat**
Class	**: 20CKHK**
Student ID	**: 101200454**

Da Nang, 6/2025

COMMENTS FROM THE SUPERVISOR

.....
.....
.....
.....
.....
.....
.....
.....
.....
.....
.....
.....
.....
.....
.....
.....
.....
.....
.....

REVIEWER'S COMMENTS

.....
.....
.....
.....
.....
.....
.....
.....
.....
.....
.....
.....
.....
.....
.....
.....
.....
.....

THE UNIVERSITY OF DANANG
UNIVERSITY OF SCIENCE AND TECHNOLOGY
FACULTY OF MECHANICAL ENGINEERING

SOCIALIST REPUBLIC OF VIETNAM
Independence - Freedom - Happiness

GRADUATION PROJECT ASSIGNMENT

No	Full name of student	Student ID	Class	Major
1	Nguyen The Phat	101200454	20CKHK	Aerospace mechanical engineering

1. *Thesis Title:* **"*Design of manufacturing and assembly process for aircraft landing gear assembly*".**
2. *Type of Thesis:* ☐ *Subject to intellectual property agreement.*
3. *Initial Data:*
   - *Production type: Mass production.*
   - *Detailed part drawings with technical specifications attached.*
   - *Equipment and tooling conditions: Optional selection.*
4. *Contents of Explanation and Calculations:*

Chapter 1: General introduction to aviation and aircraft components
Chapter 2: Detailed analysis and designt
Chapter 3: Process design for manufacturing the Landing Gear Main Shaft
Chapter 4: Process design for manufacturing the Lower Torque Link
Chapter 5: CNC machining programming of the component using creo 5.0 software
Chapter 6: Dynamic analysis of forces acting on the mechanism
Chapter 7: Assembly process of main components in aircraft landing gear

5. *Drawings and Diagrams (specify sheet sizes)*
   - General assembly overview drawing 1A0
   - Detailed part manufacturing drawing 2A0
   - Technological process flowchart 2A0
   - Assembly jig drawing 1A0
   - Machining fixture drawing for the Lower Torque Link 1A0
   - Assembly process drawing 1A0

6. *Supervisor name*	*Assigned sections*
Dr. Vo Tran Anh	Full supervision

7. *Date of assignment:*
8. *Date of completion:*

Approved by Department
Head of Department
(Signature and full name)

Da Nang, date month year 2025
Thesis Supervisor
(Signature and full name)

PREFACE

In the modern aviation industry, the design and manufacturing of aircraft component assemblies play a very important role in ensuring safety, efficiency, and durability for aviation products. In particular, the landing gear assembly is one of the most crucial parts, ensuring safe landing and ground contact. Optimizing the manufacturing and assembly process of this assembly not only helps improve production efficiency but also reduces costs, improves quality, and meets the strict requirements of the aviation industry.

This graduation thesis, titled “Design of the manufacturing and assembly process for the aircraft landing gear assembly,” was carried out to study and propose an optimal manufacturing process suitable for the current production conditions. The content of the thesis includes analyzing the technical requirements of the parts, designing manufacturing operations, selecting machines and tools, and developing an assembly plan to ensure accuracy and effectiveness.

During the process of completing this thesis, I received dedicated guidance and valuable advice from the lecturers of the Mechanical Engineering Department, University of Science and Technology – The University of Danang. I would like to sincerely thank Dr.Vo Tran Anh, who directly supervised and supported me throughout the whole process, creating favorable conditions and providing necessary knowledge to help me complete the thesis as best as possible.

Through this thesis, I hope to apply the knowledge I have learned into practice and improve my skills in analysis, design, and problem-solving in the field of mechanical engineering, especially in the aviation industry, which is a relatively new and developing field in our country.

I sincerely thank you.

Danang,…day…month…year 2025

STATEMENT OF ACADEMIC INTEGRITY

1. *Title of the thesis*: **Design of the manufacturing and assembly process for the aircraft landing gear assembly**

2. *Academic advisor*: Dr. Vo Tran Anh

3. *Student's full name*: Nguyen The Phat

4. *Commitment:*

I hereby affirm that during the process of completing this graduation thesis, I will strictly adhere to the principles of academic integrity:

- not committing fraud, fabrication, plagiarism, or assisting others in violations.
- being honest in presenting and demonstrating academic activities and outcomes derived from my own work.
- citing sources clearly and properly when using others' academic products.

I affirm that the data and research results in this thesis are truthful and have never been used to obtain any academic degree. All assistance in conducting this thesis has been acknowledged, and all cited information is clearly sourced and permitted for publication.

Da Nang, June 11, 2025

student

TABLE OF CONTENTS

CHAPTER 1. GENERAL INTRODUCTION TO AVIATION AND AIRCRAFT COMPONENTS 1

1. 1. Overview of the aviation industry 1

1.1.1. Development history 1

1.1.1.a. Pre-1914: The early years 1

1.1.1.b. 1914–1918: Aviation in world war I 1

1.1.1.c. 1918–1963: The airmail era 2

1.1.1.d. 1964–1973: Period of growth 2

1.1.1.e. 1973–1993: Oil crisis and policy changes 2

1.1.1.f. 1994–2002: Emergence of low-cost carriers (LCCs) 3

1.1.1.g. 2003–Present: Recovery and growth 4

1.1.2. Aircraft manufacturing and assembly 5

1.1.2.a. Overview of the global aircraft manufacturing and assembly process ... 5

1.1.2.b. Key suppliers in the aerospace industry 7

1. 2. General structure of aircraft 10

1.2.1. Fuselage 10

1.2.2. Monocoque 11

1.2.3. Semimonocoque 11

1.2.4. Wings 11

1.2.5. Empennage (Stabilizing surfaces) 14

1.2.6. Landing gear 15

1.2.7. Powerplant 16

CHAPTER 2. DETAILED ANALYSIS AND DESIGNT 18

2. 1. Introduction to landing gear assembly components 18

2.1.1. Torque links / Torque arms / Torsion links (Scissors assembly) 18

2.1.2. Drag link / Drag strut 19

2.1.3. Side brace link / Side strut 19

2.1.4. Overcenter link / Downlock struts / Jury struts 20

2.1.5. Trunnion 20

2.1.6. Shock struts 21

2.1.7. Shimmy damper.....22
2.1.8. Actuator / Jack / Actuating cylinder.....22
2. 2. Landing gear main shaft selection.....23
2.2.1. Role of the landing gear main strut.....23
2.2.2. Operating conditions of the landing gear main strut.....24
2. 3. Lower torque link selection.....25
2.3.1. Role of the torque link.....25
2.3.2. Operating conditions of the torque link.....25
2. 4. Material selection.....26
2.4.1. Material requirements.....26
2.4.2. Material selection for components.....27
CHAPTER 3. PROCESS DESIGN FOR MANUFACTURING THE LANDING GEAR MAIN SHAFT.....29
3. 1. Blank selection.....29
3.1.1. High strength and structural consistency.....29
3.1.2. Load-bearing capacity and fatigue resistance.....29
3.1.3. Machinability.....29
3.1.4. Reliability.....29
3. 2. Machine tool selection.....29
3. 3. Machining process plan.....31
3.3.1. Setup 1.....31
3.3.2. Setup 2.....34
Cutting tools.....35
3.3.3. Setup 3.....44
3.3.4. Slot machining.....46
CHAPTER 4. PROCESS DESIGN FOR MANUFACTURING THE LANDING LOWER TORQUE LINK.....47
4. 1. Selection of workpiece (stock material).....47
4.1.1. High strength and consistency.....47
4.1.2. Load bearing and fatigue resistance.....47

4.1.3. Machinability 47
4.1.4. Reliability 47
4. 2. Machine tool selection 47
4. 3. Machining process plan 49
4.3.1. Setup 1 49
4.3.2. Setup 2 56
4.3.3. Setup 3 63
4. 4. Jig design 66
4.4.1. Building the principle diagram: 66
4.4.2. Clamping Force Calculation, Clamping Mechanism Selection, and Force Source Determination 67
4.4.3. Calculation of jig structure tolerance. 68
CHAPTER 5. CNC MACHINING PROGRAMMING OF THE COMPONENT USING CREO 5.0 SOFTWARE 69
5. 1. Introduction to creo 5.0 software 69
5.1.1. Key features of creo 5.0 69
5.1.2. Advantages of creo 5.0 70
5.1.3. Practical applications 70
5. 2. CNC programming for the landing gear main shaft 71
5. 3. CNC programming for the lower torque link 73
CHAPTER 6. DYNAMIC ANALYSIS OF FORCES ACTING ON THE MECHANISM 76
6. 1. Preliminary Setup of dynamic load diagram on the mechanism 76
6.1.1. Dynamic analysis 76
6.1.2. Analysis of forces acting on the mechanism 79
CHAPTER 7. ASSEMBLY PROCESS OF MAIN COMPONENTS IN AIRCRAFT LANDING GEAR 83
7. 1. Main assembly units 83
7.1.1. Shock strut – piston assembly 83
7.1.2. Upper – lower torque link 83
7.1.3. Wheel assembly 84

7. 2. Fastening components 85
7.2.1. Bolts – Nuts 85
7.2.2. Washer 85
7.2.3. Bushing (Linear Bushing) 86
7.2.4. Seals 87
7.2.4.a. Seal 87
7.2.4.b. Shaft seal / Lip seal 87
7.2.4.c. Piston ring 87
7. 3. General requirements in assembly process 88
7. 4. Fixtures used in assembly process 88
7.4.1. Fixture structure 88
7.4.2. Part positioning fixture 88
7.4.2.a. Positioning 88
7.4.2.b. Clamping 89
7. 5. Assembly procedure 90
7.5.1. Piston assembly 90
7.5.2. Torque link assembly 92
7.5.3. Wheel assembly 93
7.5.4. Brake assembly 94
CONCLUSION 97
REFERENCES 98

LIST OF FIGURES

Figure 1-1. The first airplane test flight in 1903 1
Figure 1-2. Airplanes used for warfare.....2
Figure 1-3. Development process.....3
Figure 1-4. The development of the Low-Cost Carrier (LCC) model. 3
Figure 1-5. The September 11, 2001 terrorist attacks in the United States.....4
Figure 1-6. Global aviation was affected during the Covid-19 pandemic 5
Figure 1-7. Companies involved in the aviation supply chain 9
Figure 1-8. UAC factory in Da Nang 10
Figure 1-9. Semi-monocoque and monocoque structure.....11
Figure 1-10. Monoplane wing and biplane wing 12
Figure 1-11. Aircraft wing structure.....13
Figure 1-12. Types of flaps 14
Figure 1-13. Empennage structure 15
Figure 1-14. Aircraft main landing gear.....16
Figure 1-15. Engine compartment.....16
Figure 2-1. Torque Link 19
Figure 2-2. Drag Link.....19
Figure 2-3. Side Brace Link 20
Figure 2-4. Jury Strut.....20
Figure 2-5. Trunnion 21
Figure 2-6. Shock strut 21
Figure 2-7. Shimmy Damper.....22
Figure 2-8. Actuating Cylinder.....23
Figure 2-9. Landing Gear Main Shaft 23
Figure 2-10. Lower torque link 25
Figure 3-1. WFL M120 Millturn 30
Figure 3-2. Fixturing diagram – setup 1, steps 1+2.....31
Figure 3-3. Turning tool C6-DDMNL-00130-15.....32
Figure 3-4. Specifications of turning tool C6-DDMNL-00130-15 32
Figure 3-5. Drill tool DC175-05-20.000A1-WJ30RZ.....32
Figure 3-6. Fixturing diagram – setup 1, step 3 33
Figure 3-7. Fixturing diagram – setup 2, steps 1+2.....34
Figure 3-8. Fixturing diagram – setup 2, step 3 35
Figure 3-9. Milling tool F5041.B16.040.Z06.08.....35
Figure 3-10. Fixturing diagram – setup 3, step 4 36
Figure 3-11. Milling tool F4042.T22.025.Z04.08 37

Figure 3-12. Fixturing diagram – setup 2, step 5 38
Figure 3-13. Milling tool H4036217-20 38
Figure 3-14. Fixturing diagram – setup 2, steps 6 39
Figure 3-15. Fixturing diagram – setup 2, step 7 40
Figure 3-16. Reaming tool F2162-20 40
Figure 3-17. Fixturing diagram – setup 2, steps 8+9 41
Figure 3-18. Reaming tool A1163-12 41
Figure 3-19. Fixturing diagram – setup 2, steps 10 42
Figure 3-20. Milling tool H602111-10 42
Figure 3-21. Fixturing diagram – setup 2, steps 11+12 43
Figure 3-22. Fixturing diagram – setup 3, step 1 44
Figure 3-23. Fixturing diagram – setup 3, step 2 45
Figure 3-24. Grooving operation 46
Figure 4-1. VF-2-FE Vertical CNC Milling Machine 48
Figure 4-2. Fixturing diagram – setup 1, step 1 50
Figure 4-3. Milling tool VPX200 50
Figure 4-4. ixturing diagram – setup 1, step 2 51
Figure 4-5. Milling tool IMX10C3A100R25008 52
Figure 4-6. Fixturing diagram – setup 1, step 3+4 53
Figure 4-7. Milling tool SEG4080SA 53
Figure 4-8. Fixturing diagram – setup 1, step 5+6 55
Figure 4-9. Milling tool DLC2MBR0300 55
Figure 4-10. Fixturing diagram – setup 2, step 1 57
Figure 4-11. Fixturing diagram – setup 2, step 2 58
Figure 4-12. Fixturing diagram – setup 2, step 3 60
Figure 4-13. Milling tool C2MAD1200 60
Figure 4-14. Fixturing diagram – setup 2, step 4+5 61
Figure 4-15. Fixturing diagram – setup 3, step 1+2 63
Figure 4-16. Drill bit SD1108A-1950-170-20R1 64
Figure 4-17. Reamer PMX08BHM-14500-20N1 65
Figure 5-1. Workpiece for machining the landing gear main shaft 72
Figure 5-2. Rough milling of the landing gear main shaft 72
Figure 5-3. Rough contour milling of the landing gear main shaft 73
Figure 5-4. Contour milling of the top surface of the landing gear main shaft 73
Figure 5-5. Finish milling of the landing gear main shaft 73
Figure 5-6. Workpiece for machining the lower torque link 74
Figure 5-7. Surface contour milling of part lower torque link 74

Figure 5-8. Drilling of part lower torque link 75
Figure 6-1. Dynamic Model of Aircraft Landing Gear System 76
Figure 6-2. Load and Moment Analysis Diagram of Aircraft Landing Gear 79
Figure 6-3. Moment of Inertia Distribution in the Bearing Region of the Landing Gear Cylinder 80
Figure 6-4. Contact Load Model for the Inner–Outer Cylinder Sliding Interface 81
Figure 7-1. Flat washer.....85
Figure 7-2. Split lock washer.....86
Figure 7-3. Fixture structure.....88
Figure 7-4. Locating bar.....89
Figure 7-5. V-block with clamp 89
Figure 7-6. Socket head cap screw 90
Figure 7-7. Xylanh-piston assembly.....92
Figure 7-8. Lower-upper torque link assembly 93
Figure 7-9. Wheel frame assembly.....94
Figure 7-10. Brake assembly 95

CHAPTER 1. GENERAL INTRODUCTION TO AVIATION AND AIRCRAFT COMPONENTS

1. 1. Overview of the aviation industry

1.1.1. Development history

It has been more than 100 years since the aviation industry was formed. The history of aviation spans over a century filled with remarkable milestones. From the first successful flight in 1903 to the present day, the industry has seen incredible advancements in both aviation technology and service.

1.1.1.a. Pre-1914: The early years

The aviation industry emerged in the early 1900s when aircraft designers in several countries began conducting successful flight experiments. On December 17, 1903, Orville and Wilbur Wright successfully invented the first powered aircraft after four years of research. The inaugural flight lasted just 12 seconds and reached an altitude of 37 meters in Kitty Hawk, North Carolina.

Figure 1-1. The first airplane test flight in 1903

1.1.1.b. 1914–1918: Aviation in world war I

During World War I, aviation technology research was primarily focused on meeting military needs. Aircraft prices increased rapidly due to high government demand. This period saw significant advancements in aircraft technology and engine performance. Aircraft became larger and achieved speeds up to 130 mph—twice as fast as their predecessors. However, after the war, with a surplus of aircraft and reduced military demand, prices plummeted. Many manufacturers went bankrupt, and the industry entered a recession.

Figure 1-2. Airplanes used for warfare

1.1.1.c. 1918–1963: The airmail era

In 1918, the first official airmail service was launched. The U.S. military transferred mail transportation duties to the U.S. Post Office. The first airmail route connected College Park, Maryland, and Chicago. Revenue from airmail laid the foundation for the aviation industry's growth in later years. During this period, the first jet aircraft were developed, initially for military use in Germany and later for commercial service. In 1952, British Overseas Airways Corporation (BOAC), a UK government airline, launched a London–Johannesburg route. Six years later, the Boeing 707 entered transatlantic service, marking the beginning of a new era in aviation.

1.1.1.d. 1964–1973: Period of growth

This era witnessed strong growth in the aviation sector. Technology improved to support both passenger and cargo aircraft. Air traffic surged—2.7 times higher than in the previous period—with average annual growth of 10%. In 1971, Federal Express Corporation (FedEx) pioneered the air-based door-to-door cargo delivery service, promising timely and reliable shipments directly to customers.

1.1.1.e. 1973–1993: Oil crisis and policy changes

This period featured two major events: the oil crisis and deregulation.

The 1975 oil crisis sharply increased operating costs, as fuel accounted for 40–60% of airline expenses. Soaring oil prices slashed airline profits. Additionally, deregulation in developed countries lowered entry barriers, intensifying competition and reducing industry profitability. However, the number of air passengers and airports worldwide continued to grow significantly.

Figure 1-3. Development process.

1.1.1.f. 1994–2002: Emergence of low-cost carriers (LCCs)

In the 1990s, globalization reshaped the aviation business model. Manufacturers relocated production to low-wage countries and established subsidiaries and distribution centers to expand globally. E-commerce also began to emerge.

Airlines expanded fleets and improved infrastructure to meet increasingly demanding customer expectations. The low-cost carrier (LCC) model gained traction by offering affordable air travel, pressuring traditional airlines to reduce fares. LCCs boosted air travel demand significantly. Passenger volume increased by about 50%, from 1.3 billion in 1994 to 2 billion in 2000. Load factors rose from 66% to 73% by 2000.

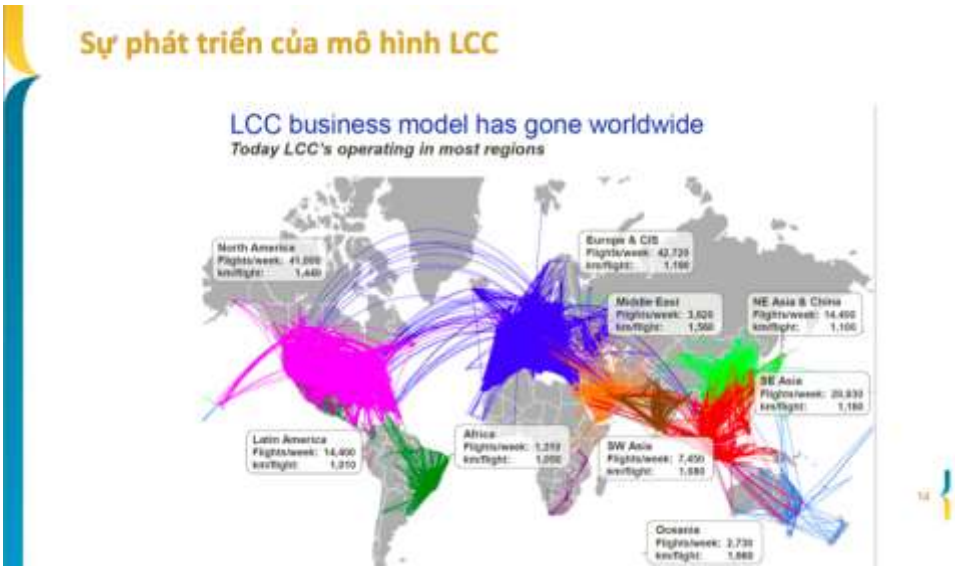

Figure 1-4. The development of the Low-Cost Carrier (LCC) model.

However, the terrorist attacks of September 11, 2001, plunged the industry into crisis. Four commercial airliners operated by United Airlines and American Airlines were hijacked by 19 Al-Qaeda terrorists. Two aircraft struck the Twin Towers of the World Trade Center in New York City. The aviation industry experienced a severe downturn, with passenger traffic falling by 19.8% in 2001.

Figure 1-5. The September 11, 2001 terrorist attacks in the United States

1.1.1.g. 2003–Present: Recovery and growth

Following the 2001 downturn, global aviation began to recover and grow. From 2003 to 2017, passenger and air cargo volumes grew at average annual rates of 6.7% and 3.5%, respectively. However, this period also witnessed three major disruptions:

July 2003 – SARS Outbreak: Originating in Hong Kong, SARS spread across Asia and worldwide. Many countries imposed travel restrictions, stalling passenger growth.

2008–2009 Global Financial Crisis: Sparked by the U.S. credit and housing crisis, the global economy plunged into recession. Air passenger traffic in 2009 fell by 10% compared to 2008.

December 2019 – COVID-19 Pandemic: First detected in Wuhan, China, the outbreak spread globally. Nations implemented travel restrictions, halting flights and disrupting economies. The pandemic lasted over two years. Today, the aviation sector is gradually recovering.

Figure 1-6. Global aviation was affected during the Covid-19 pandemic

1.1.2. Aircraft manufacturing and assembly

1.1.2.a. Overview of the global aircraft manufacturing and assembly process

The global aviation industry is a complex network involving multiple stages and requiring close cooperation among nations, manufacturers, suppliers, and regulatory bodies. Aircraft manufacturing and assembly include several steps, from design and fabrication of individual components to final assembly and quality inspection.

❖ **<u>Design and development</u>**

- Research and development (R&D)

Before an aircraft is manufactured, it must go through the research and development (R&D) phase. Major aircraft manufacturers such as Boeing and Airbus invest billions of dollars in R&D to develop new designs and improve existing models. Engineers and designers use advanced technologies such as computer-aided design (CAD) and computational fluid dynamics (CFD) to create detailed aircraft designs.

- Detailed design

Once the initial concept is approved, the detailed design phase begins. Engineers transform ideas into technical drawings and define specifications for each aircraft component. Every small detail must be meticulously calculated to ensure the aircraft's safety and performance.

❖ **Component manufacturing**

- Production of major components

After detailed design is completed, major aircraft components are manufactured across various countries and suppliers.

- Examples include:
  + Wings: Produced by companies such as Mitsubishi Heavy Industries (Japan) and Airbus (Germany)
  + Fuselage: Manufactured by suppliers such as Leonardo (Italy) and Spirit AeroSystems (USA)
  + Engines: Supplied by General Electric, Rolls-Royce, and Pratt & Whitney

- Production of Subcomponents

Besides the main components, thousands of subcomponents must also be produced, including electronic systems, control systems, and cabin interiors.

❖ **Final assembly**

Once manufactured, components are transported to final assembly lines. Boeing operates major assembly plants in Everett and Renton (Washington, USA), while Airbus has facilities in Toulouse (France), Hamburg (Germany), and Mobile (Alabama, USA).

Final assembly begins by joining large structures such as wings, fuselage, and tail. Then, systems such as engines, avionics, and interiors are installed. Each step undergoes rigorous inspection to ensure everything functions correctly.

❖ **Testing and certification**

➢ Quality inspection

After assembly, the aircraft must pass stringent quality inspections. These include structural testing, electrical systems, hydraulic systems, and other subsystems. Engineers inspect every detail to ensure there are no defects.

The new aircraft then undergo test flights to verify performance under real-world flying conditions. These flights help identify any issues to be resolved before delivery.

Certification

Finally, the aircraft must be certified by aviation authorities such as the FAA (Federal Aviation Administration) or EASA (European Union Aviation Safety Agency). Certification ensures the aircraft meets all safety and performance standards.

❖ **Delivery and maintenance**

After passing inspection and certification, the aircraft is delivered to the customer. This process includes documentation handover, user manuals, and crew training.

Manufacturers provide after-sales support and maintenance to ensure the aircraft remains operational throughout its life cycle. These services include routine maintenance, spare parts supply, and software updates.

➢ Future technologies in application

- 3D printing

3D printing is increasingly used in aircraft manufacturing. It enables the prodction of complex parts at lower cost and shorter lead times.

- Artificial intelligence (AI)

AI is being applied to optimize design and manufacturing processes. It can analyze data from test flights to improve aircraft design and predict technical issues.

- Composite materials

Composite materials such as carbon fiber are widely used to reduce aircraft weight and increase strength. These materials enhance performance and lower fuel consumption.

1.1.2.b. Key suppliers in the aerospace industry

The global aircraft manufacturing and assembly system continues to expand in scale. While the industry explores and develops in potential markets and regions, major suppliers—the industry giants—remain central to the development and production of aircraft.

General Electric (GE Aviation): One of the world's largest aircraft engine manufacturers, GE Aviation supplies engines for both commercial and military aircraft. Notable engines such as the GE90, GEnx, and LEAP are used on many Boeing and Airbus aircraft. GE also develops advanced engine control and avionics systems that improve aircraft performance and reliability.

- Rolls-Royce: Known for powerful and efficient engines like the Trent 1000 and Trent XWB, used on the Boeing 787 Dreamliner and Airbus A350. Rolls-Royce also pioneers technologies to reduce fuel consumption and emissions, supporting sustainable aviation.
- Pratt & Whitney: A subsidiary of Raytheon Technologies, Pratt & Whitney produces engines such as the PW1000G (GTF) and F135, used in both commercial and military aircraft. The GTF engine is notable for fuel efficiency and noise reduction and is used on aircraft like the Airbus A320neo.
- Spirit AeroSystems: A major supplier of structural components for Boeing and Airbus, Spirit produces the forward and mid-fuselage sections for the Boeing 737 and 787, as well as wing components for various aircraft. Their expertise in composite and aluminum alloy structures enhances aircraft durability and reduces weight.
- Safran: Through its CFM International joint venture with GE Aviation, Safran produces LEAP and CFM56 engines used extensively on Boeing 737 and Airbus A320 aircraft. Safran also supplies landing gear, flight control systems, and avionics that contribute to aircraft safety and performance.
- Honeywell Aerospace: Provides a wide range of aviation systems and equipment, from Flight Management Systems (FMS) to avionics and Environmental Control Systems (ECS). Honeywell products optimize performance and enhance aircraft safety.
- Leonardo: Supplies fuselage components and avionics for various commercial and military aircraft. Leonardo's products are known for their advanced technology and high durability, widely used in international aerospace projects.
- Mitsubishi Heavy Industries: Manufactures major components such as wings and flight control systems for Boeing and others, using advanced manufacturing technologies to ensure high precision and superior performance.
- GKN Aerospace: Supplies aircraft structures and fuel management systems for manufacturers like Boeing and Airbus. GKN uses composite materials and advanced manufacturing methods to reduce weight and increase durability.

- Thales Group: Provides advanced avionics systems, communication, and flight control systems for various aircraft. Thales products enhance safety and performance and support modern communication and navigation solutions.
- Rockwell Collins (now Collins Aerospace): Supplies avionics, communication, and inflight entertainment systems for both commercial and military aircraft. Collins Aerospace products help optimize performance and enhance passenger experience.
- Hexcel Corporation: A major supplier of composite materials such as carbon fiber for aerospace applications. Hexcel products help reduce aircraft weight, increase strength, and improve fuel efficiency.
- BAE Systems: Supplies flight control systems, radar, and avionics for military and commercial aircraft. BAE Systems' products are known for high reliability and advanced technology, contributing to aircraft safety and performance.
- UTC Aerospace Systems (now part of Collins Aerospace): Provides a wide range of aerospace systems and components, including avionics, flight controls, and power management systems that optimize aircraft performance and ensure safety.
- AAR Corp: Offers maintenance, repair, and overhaul (MRO) services, along with spare parts and technical support. AAR services ensure aircraft remain safe and operational throughout their service life.

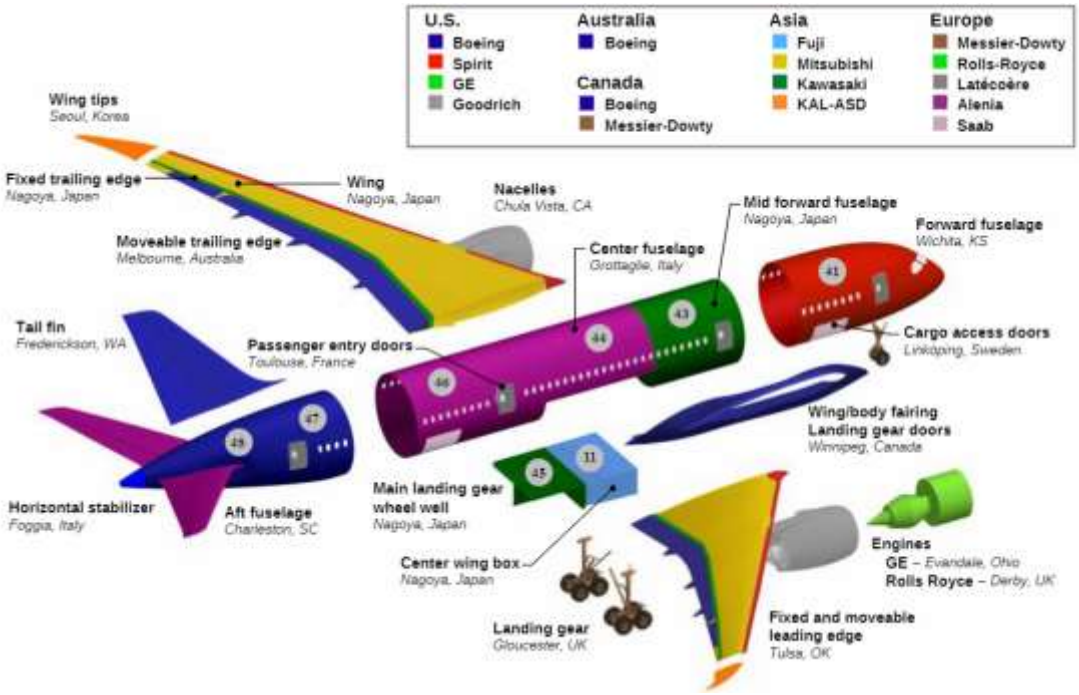

Figure 1-7. Companies involved in the aviation supply chain

In Vietnam, local suppliers have also begun integrating into the global aerospace supply chain. Some notable suppliers include:

Figure 1-8. UAC factory in Da Nang

- UAC (Universal Alloy Corporation): A leading global manufacturer of aircraft components for companies such as Boeing, Airbus, Embraer, Bombardier, and their associated supply chains. UAC holds long-term contracts for Boeing 787, 777, 767, and 737; Airbus A350, A330, A320, A220, and ATR; Embraer E195; and Bombardier CRJ.
- KP Aerospace Vietnam (KPC VINA): Specializes in assembling large aircraft components. Their focus includes manufacturing and assembling aircraft parts such as APU doors, MIC tips, wing boxes, winglets, and flap support fairings for Boeing 787 and Boeing 737 MAX aircraft.

1. 2. General structure of aircraft

Although aircraft are designed for various purposes, most of them share the same main components. The overall characteristics are largely determined by the initial design objectives. Most aircraft structures consist of key components such as the fuselage, wings, stabilizing surfaces, landing gear, and powerplant. Secondary components include the airframe, electrical systems, flight controls, and brakes.

1.2.1. Fuselage

The fuselage is the central structure of the aircraft and is designed to accommodate the crew, passengers, and cargo. It also provides structural connections for the wing and tail assemblies. Older aircraft designs used an open truss structure made from wood, steel, or aluminum tubing. The most common types of fuselage structures used in modern aircraft are monocoque (French for “single shell”) and semimonocoque.

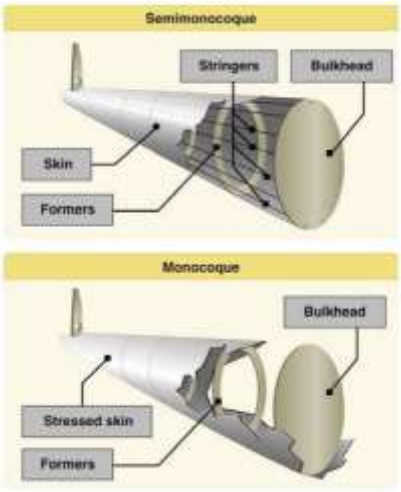

Figure 1-9. Semi-monocoque and monocoque structure

1.2.2. Monocoque

The monocoque structure uses a load-bearing skin to support nearly all structural loads. While very strong, monocoque structures have limited ability to withstand surface deformation.

Because most of the torsional and bending stresses are carried by the outer shell rather than by an internal open framework, the need for internal bracing is eliminated or reduced—saving weight and maximizing space.

Although used in the early days of aviation, monocoque construction did not reappear for several decades due to the complexity involved. Examples of monocoque structures can be found in automobile manufacturing, where it is considered standard.

1.2.3. Semimonocoque

The semimonocoque structure, as the name suggests, uses a partial internal structure to support the skin. This substructure, which includes bulkheads and/or formers of various sizes and stringers, reinforces the load-bearing skin by sharing some of the bending stresses from the fuselage.

The main section of the fuselage also includes wing attachment points and the firewall. On single-engine aircraft, the engine is typically mounted at the front of the fuselage. A firewall, located between the engine and the cockpit or cabin, protects the pilot and passengers from engine fires. This firewall is usually made of heat-resistant material such as stainless steel.

1.2.4. Wings

Wings are airfoils attached to each side of the fuselage and serve as the primary lifting surfaces that support the aircraft in flight. A wide variety of wing designs, sizes,

and shapes are used by different manufacturers, each tailored to meet specific performance goals for a given aircraft.

Wings may be mounted high, mid, or low on the fuselage. These designs are referred to respectively as high-wing, mid-wing, and low-wing configurations. The number of wings may also vary. An aircraft with a single set of wings is called a monoplane, while one with two sets is called a biplane.

Figure 1-10. Monoplane wing and biplane wing

Many high-wing aircraft have external bracing or wing struts that transfer flight and landing loads through the strut to the fuselage structure. Since these struts are typically mounted about halfway along the wing span, this type of wing structure is called semi-cantilever. Some high-wing aircraft and most low-wing aircraft feature a full cantilever wing design that carries all loads internally without external bracing.

The main structural parts of the wing include spars, stringers, and ribs. These are reinforced with trusses, I-beams, tubing, or other components including the skin. The ribs define the wing's shape and thickness. In most modern aircraft, fuel tanks are either built into the wing structure or consist of flexible containers installed within the wings.

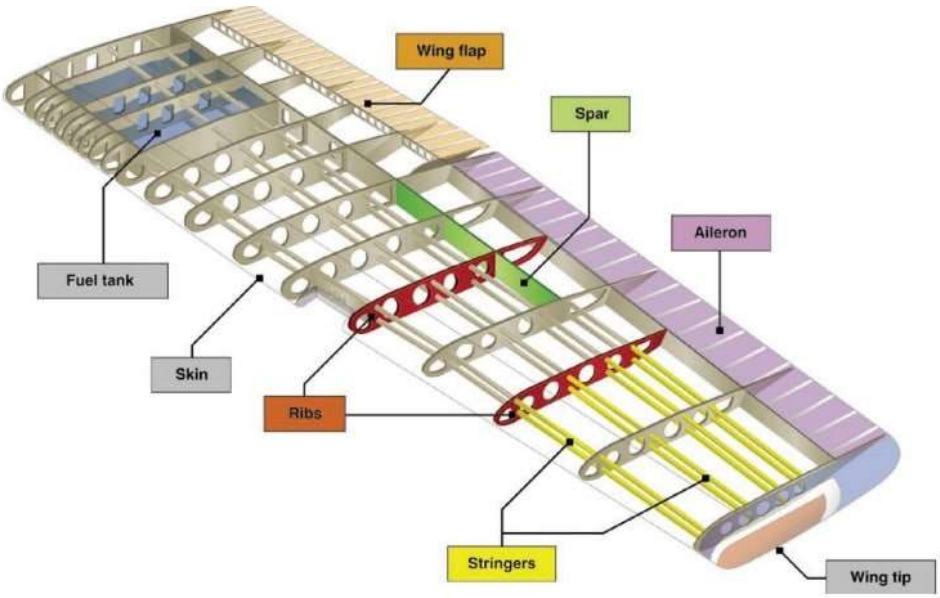

Figure 1-11. Aircraft wing structure

Attached to the trailing edges of the wings are two types of control surfaces: ailerons and flaps. Ailerons extend from about the midpoint of each wing outward toward the tips and move in opposite directions to create aerodynamic forces that roll the aircraft. Flaps, which extend from the fuselage outward to near the midpoint of each wing, are usually flush with the wing surface during cruise. When extended downward, flaps increase the wing's lift for takeoff and landing.

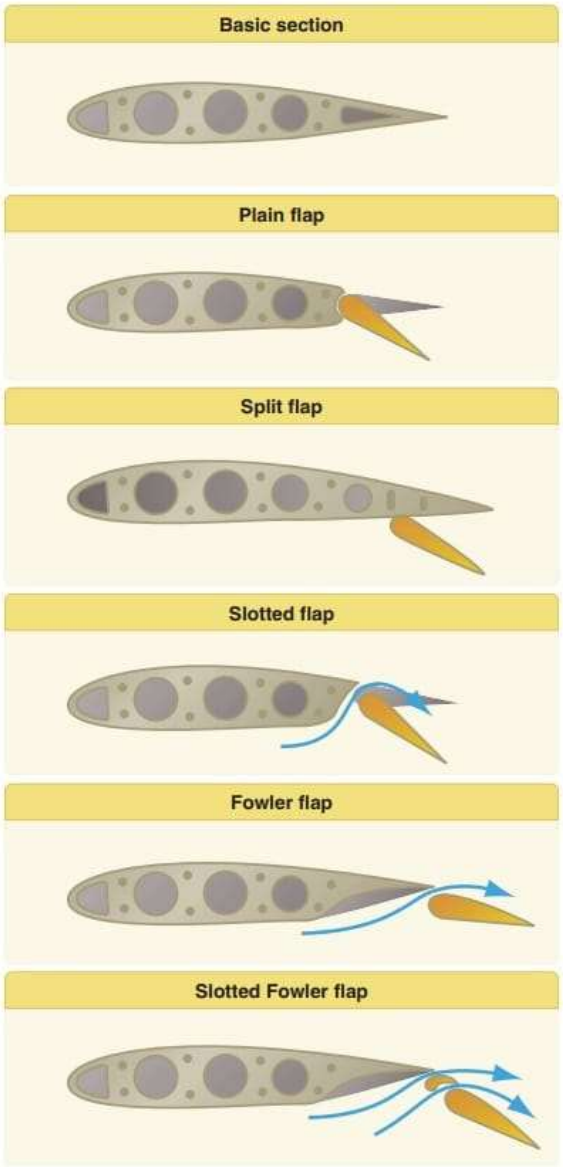

Figure 1-12. Types of flaps

1.2.5. Empennage (Stabilizing surfaces)

The empennage, or tail assembly, includes all the tail components. It comprises fixed surfaces such as the vertical stabilizer and horizontal stabilizer, as well as movable surfaces such as the rudder, elevator, and trim tabs.

- Rudder: A movable surface mounted on the vertical stabilizer that allows the aircraft to yaw left or right around its vertical axis. The rudder is controlled by foot pedals in the cockpit.
- Elevator: Located on the trailing edge of the horizontal stabilizer, the elevator can deflect up or down to pitch the aircraft nose up or down. The elevator is controlled by the control yoke in the cockpit. Pulling the yoke back raises the elevator, lowers the tail, and raises the nose.

- Stabilator: Similar to a horizontal stabilizer, but it is a single-piece movable surface that functions as an elevator. Stabilators often include an integrated tab that moves in the same direction to enhance control feedback for the pilot.
- Trim Tab: A small adjustable tab mounted on the trailing edge of the rudder or elevator. Trim tabs can be set by the pilot to reduce control force, making it easier to maintain a desired flight attitude.

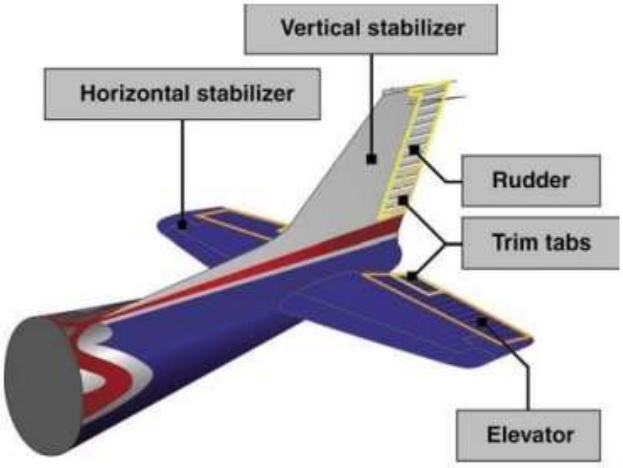

Figure 1-13. Empennage structure

1.2.6. Landing gear

The landing gear supports the aircraft during ground operations such as parking, taxiing, takeoff, and landing. The most common type uses wheels, but aircraft may also be equipped with floats for water operations or skis for snow landings. Landing gear typically includes three wheels—two main wheels and a third wheel located either at the front or rear. A gear configuration with the third wheel at the rear is called conventional landing gear, and such aircraft are often referred to as tailwheel airplanes. When the third wheel is at the front, it is called a nosewheel, and the design is referred to as tricycle gear. Both nosewheels and tailwheels can be steerable, allowing the aircraft to be maneuvered during ground operations. Most aircraft are steered by moving the rudder pedals, regardless of gear type. Some aircraft may also use differential braking for ground control.

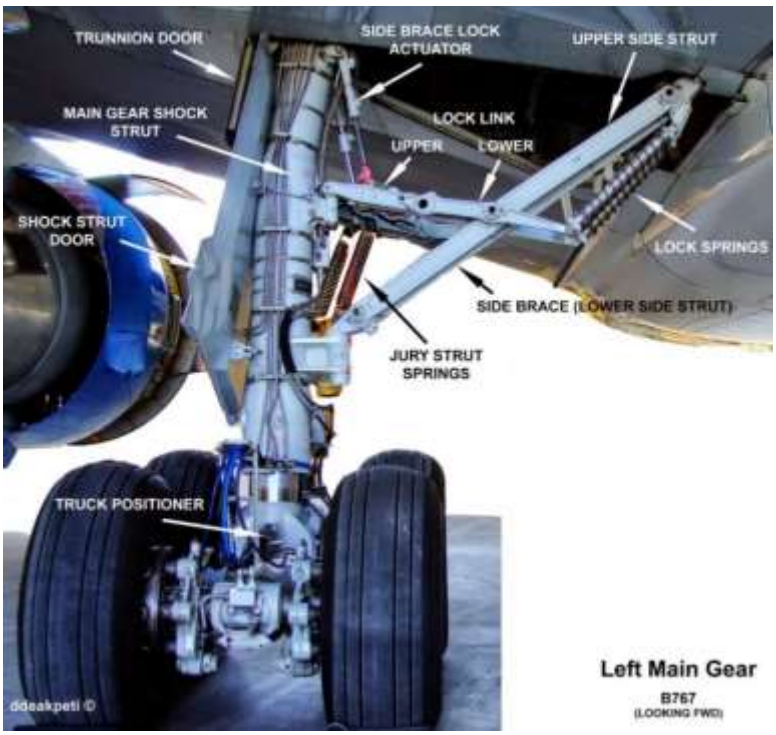

Figure 1-14. Aircraft main landing gear

1.2.7. Powerplant

The powerplant generally consists of both the engine and the propeller. The primary function of the engine is to generate power to turn the propeller. It also supplies electrical power, vacuum sources for flight instruments, and in most single-engine aircraft, cabin heating.

The engine is enclosed in a cowling or engine nacelle, both of which serve as covers. These help streamline airflow around the engine and assist in engine cooling by directing airflow over the cylinders.

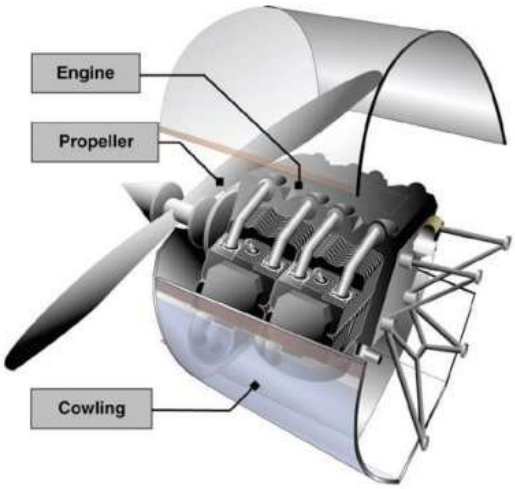

Figure 1-15. Engine compartment

The propeller, mounted at the front (or rear, in pusher configurations), converts engine rotational energy into thrust—a forward force that propels the aircraft through the air. The propeller acts like a rotating wing, generating thrust through aerodynamic lift. A low-pressure region forms behind the propeller blade and high pressure forms in front—similar to how an aircraft wing generates lift. The resulting pressure difference pulls air through the propeller and drives the aircraft forward.

CHAPTER 2. DETAILED ANALYSIS AND DESIGNT

2. 1. Introduction to landing gear assembly components

The components of an aircraft landing gear system form a complex assembly of multiple parts designed to support the aircraft during takeoff, landing, and ground operations. The main components include:

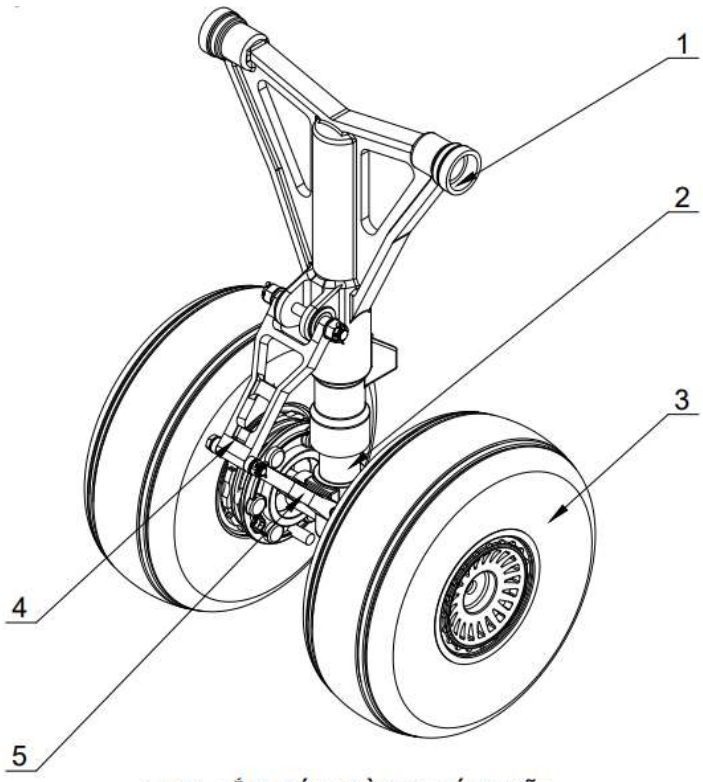

CỤM LẮP RÁP CÀNG ĐÁP MŨI

Note:

1 – Main Shaft
2 – Piston Rod
3 – Wheel Assembly
4 – Upper Link
5 – Lower Link

2.1.1. Torque links / Torque arms / Torsion links (Scissors assembly)

- Maintain wheel and axle alignment with the shock strut (misalignment is corrected by installing shims or spacers of different thicknesses).
- Prevent the piston rod from rotating within the shock strut.
- Limit piston extension during operation.

Function

- Serve as a hinged connection between the piston and the cylinder of the oleo shock strut.

- Allow the piston to move freely in and out of the landing gear cylinder while preventing rotation.
- Can be adjusted to keep the landing gear wheels properly aligned.

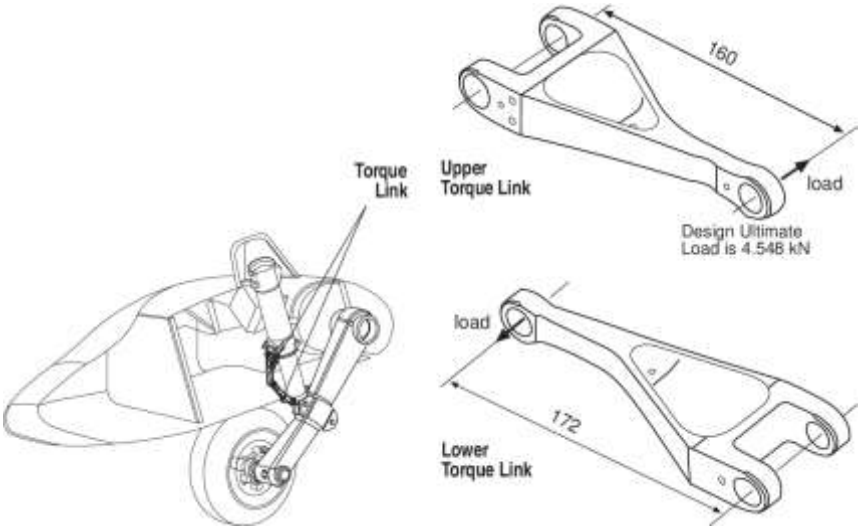

Figure 2-1. Torque Link

2.1.2. Drag link / Drag strut

- Stabilizes the landing gear system and aircraft structure in the longitudinal direction.

Function:

- Attached to the axle to prevent the landing gear from rotating.

Figure 2-2. Drag Link

2.1.3. Side brace link / Side strut

Stabilizes the landing gear and aircraft structure in the lateral (side-to-side) direction.

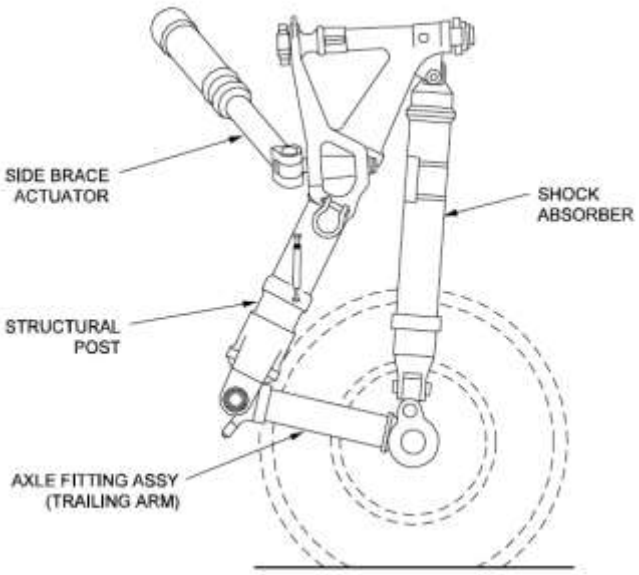

Figure 2-3. Side Brace Link

2.1.4. Overcenter link / Downlock struts / Jury struts

- Locks the drag link and side brace in the "locked" and "down" position.
- Operated hydraulically via a bungee cylinder or mechanically via a bungee spring.

Function:

- The side brace assembly includes a jury strut that helps lock the side brace to the landing gear in the extended (down) position.

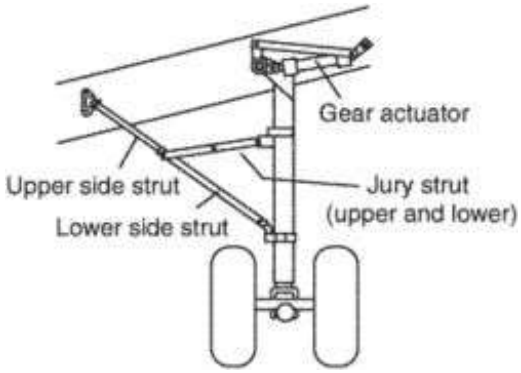

Figure 2-4. Jury Strut

2.1.5. Trunnion

- A fixed structural extension of the upper cylinder, providing bearing surfaces that allow the entire landing gear assembly to pivot.
- Enables the landing gear to retract and extend.
- Supported at its ends by bearings, allowing rotational motion during retraction and extension (forming the cylinder of the oleo pneumatic shock absorber).

Function

- Supports landing gear loads transmitted from the aircraft while on the ground.

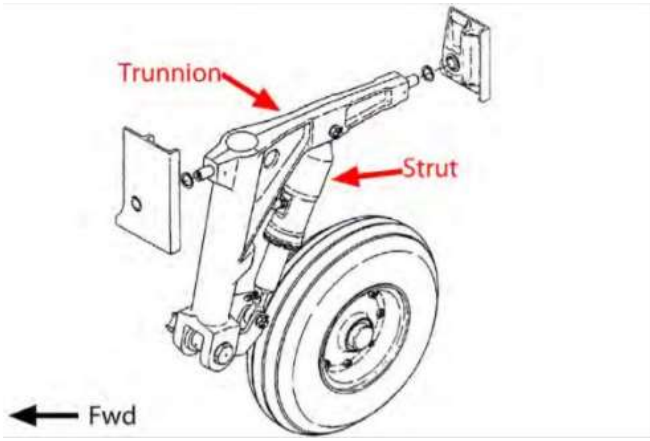

Figure 2-5. Trunnion

2.1.6. Shock struts

A conventional pneumatic/hydraulic shock absorber using compressed air or nitrogen combined with hydraulic fluid to absorb and dissipate landing loads.

- Consists of two nested cylinders or tubes sealed at their outer ends.
- The upper cylinder is fixed to the aircraft and remains stationary.
- The lower piston can slide freely in and out of the cylinder.
- The lower chamber is filled with hydraulic fluid, while the upper chamber contains compressed gas or nitrogen. A metering orifice between the chambers allows fluid transfer during compression.

Function:

- Absorbs and dissipates landing impact through a piston-cylinder mechanism, which dampens shocks and protects the airframe by preventing rebound forces.

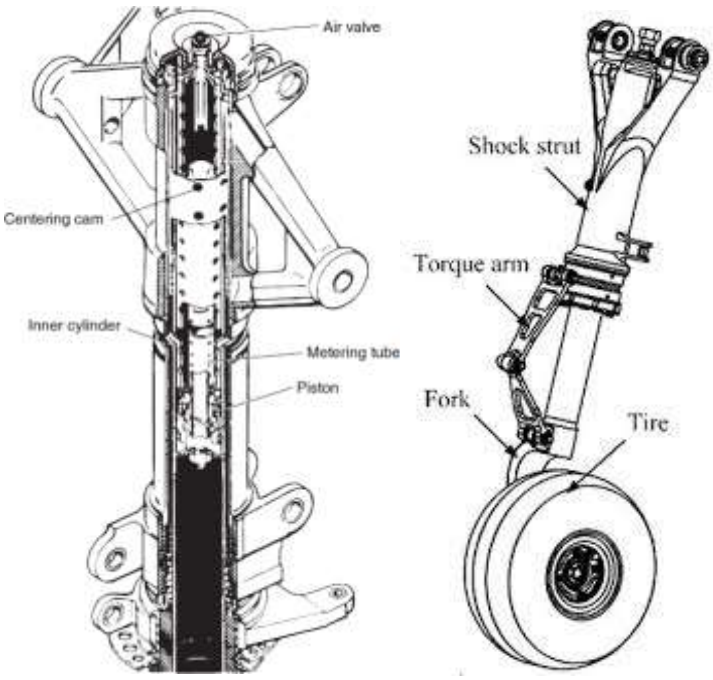

Figure 2-6. Shock strut

2.1.7. Shimmy damper

- A shimmy damper uses a hydraulic fluid-filled cylinder or rubber/lubricant combination to restrict rapid oscillations of the nose wheel, while allowing slower, controlled movements.
- The hydraulic damping system reduces high-frequency side-to-side vibrations (shimmy) of the nose or tail wheel.

Function:

- Fluid is forced from one end of the cylinder to the other. At higher speeds, the restricted fluid flow dampens unwanted oscillations, thereby stabilizing the nose wheel and preventing shimmy.

Figure 2-7. Shimmy Damper

2.1.8. Actuator / Jack / Actuating cylinder

- A drive system that provides retraction force with low weight and high reliability.
- Extends and retracts the landing gear and can also serve as a locking mechanism (using continuous pressure).
- Gear retraction actuators are made from fully forged blanks or machined from forged billets into a single-piece housing. Housings are typically made of stainless steel for strength and corrosion resistance.
- High-strength, wear-resistant materials are used for pistons, cylinder heads, and bearings to ensure durability and reliability without requiring frequent maintenance.

Function:

- The landing gear rotates about a pivot axis using the actuating system.
- To retract the gear, an unlocking actuator pulls the locking link out of the overcenter position, allowing the retraction actuator to draw the landing gear

into the stowed position. Both actuators (for unlocking and retract/extend) are hydraulically powered.

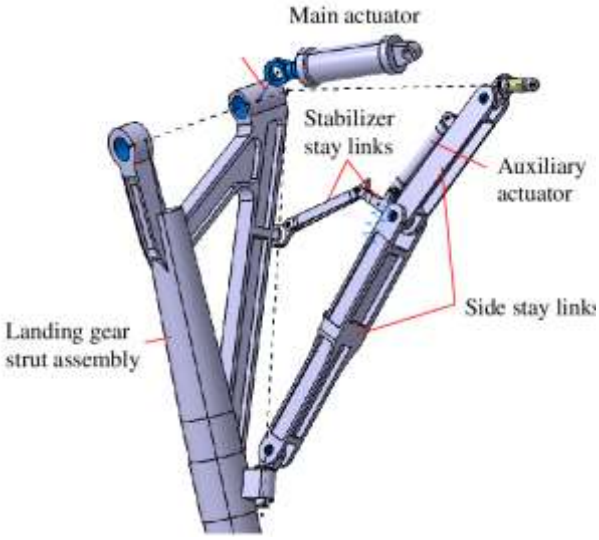

Figure 2-8. Actuating Cylinder

2. 2. Landing gear main shaft selection

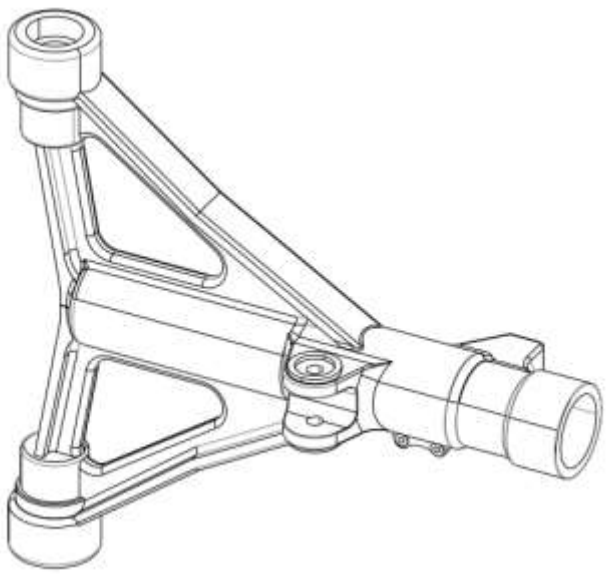

Figure 2-9. Landing Gear Main Shaft

2.2.1. Role of the landing gear main shaft

The landing gear main shaft is one of the most critical components of an aircraft's landing gear system. It plays a key role in ensuring the aircraft can take off, land, and taxi safely and stably.

<u>Primary load bearing during takeoff and landing</u>

- Load bearing: the main shaft bears the majority of the aircraft's load upon landing. when the aircraft touches down, its weight is transferred through the main strut to the ground. it is engineered to withstand the high and sudden impact forces encountered during landing.

- Shock absorption: the main shaft is typically equipped with a shock absorber or a hydraulic/pneumatic damping system to mitigate impact and vibration, enhancing comfort and safety for passengers and crew.

Ground stability

- Stability: the main strut helps maintain aircraft stability while on the ground, including during taxiing, takeoff, and landing. it ensures balanced positioning and prevents tipping or unintended roll.
- Impact absorption from ground surface: while taxiing over uneven surfaces, the main strut absorbs impact and vibration, protecting the aircraft structure from damage.

Support for Steering and Directional Control

- Directional control: working in conjunction with other components of the landing gear (such as the nose landing gear), the main strut assists pilots in maneuvering the aircraft on the ground.
- Directional guidance during landing: the main strut plays a crucial role in keeping the aircraft aligned with the runway, helping maintain a straight path during landing and reducing the risk of loss of directional control.

2.2.2. Operating conditions of the landing gear main shaft

Loading conditions

Static loads

- Load when parked: the main strut supports the full weight of the aircraft while parked on the ground. this load is evenly distributed across the main landing gear.
- Maintenance load: during maintenance, when the aircraft is lifted, the main strut must also support the load under these special conditions.

Dynamic loads

- Landing load: this is the most significant load the main strut must endure. upon touchdown, dynamic loads due to the aircraft's weight and velocity are transmitted to the strut. these include both compressive forces and impact loads.
- Takeoff load: during takeoff, the main strut must endure upward lift from the engines and the ground reaction forces.
- Taxiing load: while taxiing, the main strut supports the aircraft’s weight and reacts to forces from uneven runway surfaces.

Environmental conditions

- Temperature extremes: the main strut operates across a wide temperature range—from high ground temperatures under direct sunlight to freezing conditions at high altitudes.

- Humidity and rain: it must resist high humidity and water exposure.
- Snow and ice: in cold environments, the strut must function reliably in the presence of snow and ice.

Chemical environment

- Corrosion resistance: the main strut must resist corrosion from rainwater, seawater (at coastal airports), and chemicals such as aircraft fuel and de-icing fluids.
- Exposure to lubricants: during maintenance, the strut is exposed to oils and lubricants, requiring chemical corrosion resistance.

Mechanical conditions

- Vibration and shock: the strut is subject to ground-induced vibrations and impact shocks during taxi, takeoff, and landing.
- Torsional loads: when turning or taxiing on uneven surfaces, it must withstand torsional and bending loads.

2. 3. Lower torque link selection

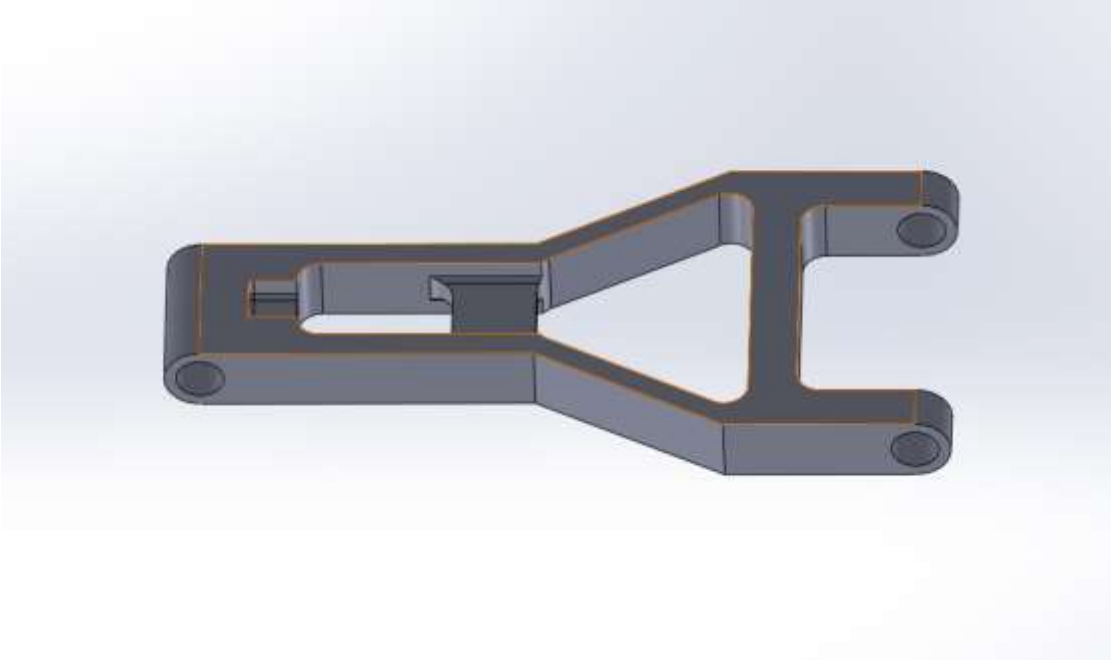

Figure 2-10. Lower torque link

2.3.1. Role of the torque link

The torque link functions to stabilize the landing gear, counter torsional forces, and prevent unwanted rotation of the strut during ground operations and touchdown.

2.3.2. Operating conditions of the torque link

Loading conditions

Static loads

- Aircraft weight: when parked, the landing gear assembly supports the full aircraft weight, including the fuselage, wings, fuel, cargo, passengers, and baggage.
- Load distribution: in a tricycle landing gear configuration, load distribution is uneven. the main gear supports most of the weight, while the nose gear carries a smaller portion.

Dynamic loads

- Landing: during landing, the assembly experiences high dynamic loads from gravity, inertia, and ground reaction forces, potentially causing strong impacts and deformation.
- Takeoff: during acceleration for takeoff, the landing gear endures dynamic loads, including compressive forces from the aircraft's weight.
- Lateral forces: during crosswind landings or lateral skids, the torque link must counteract lateral loads that would otherwise cause unwanted strut rotation.
- Braking: braking generates significant lateral and longitudinal forces, placing additional stress on the landing gear system, especially joints and bearings.

Shock absorption and hydraulic struts

- Force absorption: hydraulic shock struts absorb and dissipate landing forces, reducing load transfer to the airframe and maintaining aircraft stability.

Oil pressure: proper hydraulic pressure is essential for optimal damping performance. incorrect pressure can degrade absorption capability or cause failure. the operating environment of the landing gear assembly is extremely demanding, requiring high-performance materials and efficient damping mechanisms to ensure operational safety. Routine inspections and maintenance are critical to maintaining performance and durability.

2. 4. Material selection

2.4.1. Material requirements

❖ **Strength and reliability:**

Fatigue resistance: the main strut must withstand thousands of takeoff and landing cycles without fatigue failure.

High reliability: it must maintain structural integrity and load-bearing capacity throughout the aircraft's service life.

❖ **Material requirements**:

- High load and impact resistance
- Excellent fatigue resistance under cyclic loads

- Crack resistance
- Corrosion resistance against environmental and chemical exposure
- Thermal resistance for wide temperature variations
- Good machinability for manufacturing and forming

2.4.2. Material selection for components

Selected material: Al7175

Aluminum alloy 7175 is a high-strength 7000-series alloy known for excellent mechanical properties and corrosion resistance, making it well-suited for aerospace applications.

❖ Chemical composition:

- Aluminum (Al): 87.1%–91.4%
- Zinc (Zn): 5.7%–6.7%
- Magnesium (Mg): 2.2%–2.6%
- Copper (Cu): 1.2%–2.0%
- Iron (Fe): ≤ 0.5%
- Silicon (Si): ≤ 0.4%
- Manganese (Mn): ≤ 0.3%
- Chromium (Cr): 0.18%–0.28%
- Titanium (Ti): ≤ 0.2%
- Zirconium (Zr): ≤ 0.08%
- Other elements: ≤ 0.15% total

❖ Mechanical Properties:

- Tensile Strength: 510–560 MPa (depending on heat treatment and processing)
- Yield Strength: ~465 MPa
- Elongation: 8–10%
- Hardness: ~150–170 HB (Brinell)
- Physical Properties:
- Density: ~2.83 g/cm³
- Melting Point: ~477–635°C
- Thermal Expansion: ~23.6 × 10^{-6} /°C (20–100°C)
- Thermal Conductivity: ~130–160 W/m·K

- Electrical Conductivity: ~30–35% IACS

❖ Key characteristics:

- Fatigue resistance: excellent resistance to cyclic loading, critical for aircraft components.
- Corrosion resistance: strong resistance to atmospheric and aqueous corrosion, though additional protection may be needed in marine or aggressive environments.
- Machinability: easily machined and shaped to meet technical specifications.
- Heat treatability: can be heat-treated (solution heat-treated, quenched, and aged) to enhance mechanical performance.

CHAPTER 3. PROCESS DESIGN FOR MANUFACTURING THE LANDING GEAR MAIN SHAFT

3. 1. Blank selection

Currently, there are various blank manufacturing methods used worldwide. However, for aerospace components, solid metal/alloy billets or metal/alloy plates are predominantly used.

3.1.1. High strength and structural consistency

Mechanical strength: Solid metal/alloy billets exhibit high mechanical strength, which is essential for withstanding heavy loads and pressures under flight conditions.

Structural consistency: Solid billets have a uniform grain structure that minimizes the risk of defects such as porosity or inclusions, ensuring the integrity and reliability of the component.

3.1.2. Load-bearing capacity and fatigue resistance

Load resistance: Aerospace components are subjected to continuously varying loads; therefore, the load-bearing capability of solid metal/alloy billets is critical.

Fatigue resistance: These billets provide superior fatigue resistance compared to other methods, reducing the risk of crack formation under cyclic loading.

3.1.3. Machinability

Ease of machining: They can be easily machined using various methods such as milling, turning, drilling, and grinding.

3.1.4. Reliability

High reliability: The use of solid billets reduces the risk of defects and mechanical failures.

Thermal resistance: Capable of withstanding high temperatures while retaining favorable mechanical properties under fluctuating thermal conditions.

→ Selected blank: Solid billet, cylindrical shape, dimensions 100 × 200 × 300 mm.

3. 2. Machine tool selection

WFL M120 Millturn: One of the leading multifunctional machining centers. This is a 5-axis CNC machine capable of performing turning, milling, drilling, and gear cutting operations with high precision and efficiency. The M120 is designed to machine complex components up to 8 meters in length.

Key features:

- Multifunctional machining: The WFL M120 Millturn can perform turning, milling, drilling, gear cutting, deep hole drilling, and internal machining in a single setup, at any tool angle.
- Rigidity and stability: The machine frame is made of gray cast iron with a 60° slanted bed, providing excellent vibration damping and structural stability.
- High power and torque: The main spindle offers up to 168 hp and a maximum torque of 8680 Nm, enabling high-speed and high-load machining.
- Powerful milling spindle: With 74 hp of power, the milling spindle delivers full performance even at low speeds, ideal for large drills and cutters.
- In-process measurement: The machine is equipped with an in-process measurement system for real-time error detection and correction.
- Flexibility: Broad guideways and a wide range of hardware/software options make the machine highly adaptable to various machining tasks.

Figure 3-1. WFL M120 Millturn

Machine Specifications:

Machine Type	Millturn
Model	WFL M120/5000
Control System	Siemens 840 D
Max Swing Diameter	1160 mm
Distance Between Centers	5000 mm
Load Capacity Between Centers	8000 kg
Tool Capacity	108 + 3
Main Spindle Power	90 kW
Milling Spindle Power	55 kW
Travel in X-axis	920 mm

Travel in Y-axis	650 mm
Travel in Z-axis	5330 mm

3. 3. Machining process plan

Setup 1

- Step 1 & 2: Facing and center drilling
- Step 3: Rough turning

Setup 2

- Step 1 & 2: Facing and center drilling
- Step 3: Rough profile milling
- Step 4: Stepped cylindrical profile milling
- Step 5: Hole milling
- Step 6: Profile 1 milling
- Step 7: Drilling and boring Ø20 hole
- Step 8 & 9: Pocket profile milling and Ø12 hole drilling
- Step 10: Profile 3 milling
- Step 11 & 12: Drilling and boring two Ø18 holes

Setup 3

- Step 1: Turning Ø96 bore
- Step 2: Finish milling of profiles

3.3.1. Setup 1

❖ ***Step 1 & 2: Facing and center drilling***

Fixturing diagram:

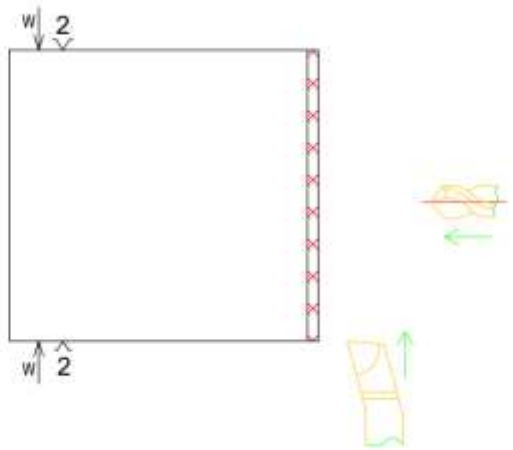

Figure 3-2. Fixturing diagram – setup 1, steps 1+2

Cutting tools:

Turning: Tool C6-DDMNL-00130-15, insert DNMG150608-FP5 WPP10S

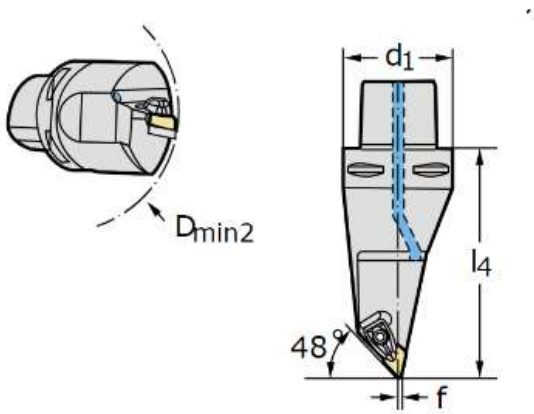

Figure 3-3. Turning tool C6-DDMNL-00130-15

Connection size code	d_1	**C6**
Functional width	f	**0.5** mm
Functional length	l_4	**130** mm
Minimum hole diameter	D_{min2}	**110** mm
Orthogonal rake angle	γ	**-5** °
Inclination angle	λ_s	**-6** °

Figure 3-4. Specifications of turning tool C6-DDMNL-00130-15

Drilling: DC175-05-20.000A1-WJ30RZ

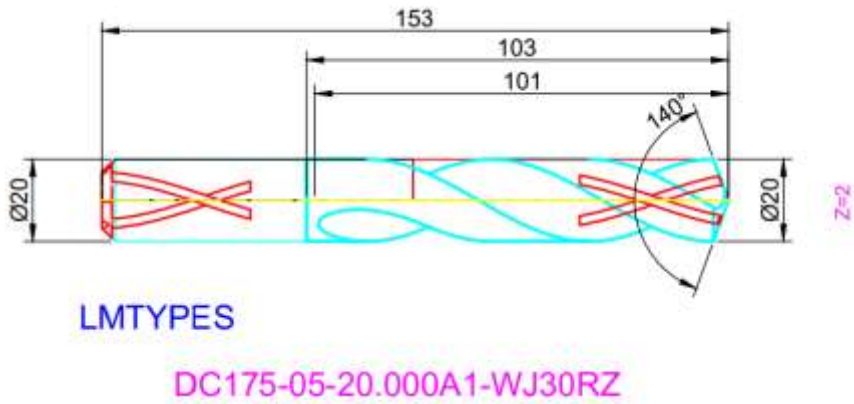

Figure 3-5. Drill tool DC175-05-20.000A1-WJ30RZ

From the reference tables, the turning cutting conditions are:

- Feed per tooth: f_z = 0,2 (mm/tooth)
- Cutting speed: v_c = 230 (m/min)
- Spindle speed calculation:

- $n = \frac{v_c.1000}{\pi.D_c} = \frac{230.1000}{\pi.110} = 665.55$ (rpm)
- Selected spindle speed n = 700 (rpm)
- Feed rate: $V_f = n.\ Z_n.\ f_z = 700.1.0,2 = 140$ (mm/min)
- Width of cut / Depth of cut:
- ae = 0,5.D = 0,5.10 = 5 (mm)
- From the reference tables, the drilling cutting conditions are:
- Feed per tooth: $f_z = 0,53$ (mm/tooth)
- Cutting speed: $v_c = 250$ (m/min)
- Spindle speed calculation:
- $n = \frac{v_c.1000}{\pi.D_c} = \frac{250.1000}{\pi.20} = 3978.87$ (rpm)
- Selected spindle speed n = 4000 (rpm)

❖ **Step 3: Rough turning**

Fixturing diagram:

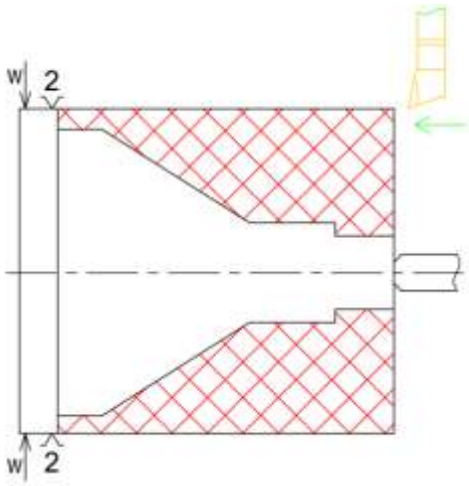

Figure 3-6. Fixturing diagram – setup 1, step 3

Cutting

Tool: Tool C6-DDMNL-00130-15, Insert DNMG150608-FP5 WPP10S

- From the reference tables, the turning cutting conditions are:
- Feed per tooth: $f_z = 0,5$ (mm/tooth)
- Cutting speed: $v_c = 320$ (m/min)
- Spindle speed calculation:
- $n = \frac{v_c.1000}{\pi.D_c} = \frac{320.1000}{\pi.110} = 925.99$ (rpm)

- Selected spindle speed n = 1000 (rpm)

3.3.2. Setup 2

❖ **Step 1 + 2: Facing and center drilling**

Fixturing Diagram:

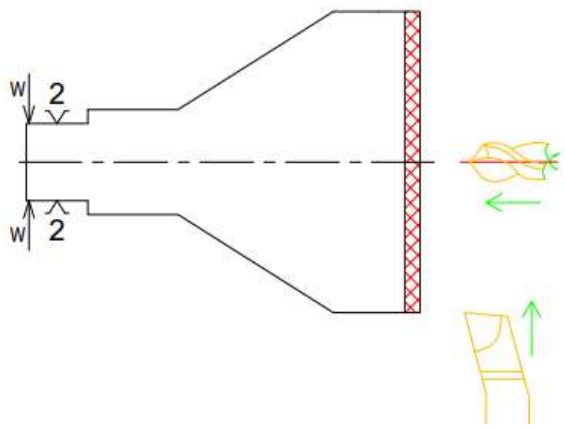

Figure 3-7. Fixturing diagram – setup 2, steps 1+2

Turning: Tool C6-DDMNL-00130-15, Insert DNMG150608-FP5 WPP10S

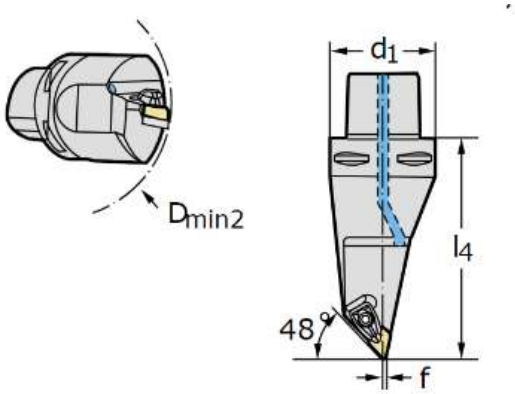

Connection size code	d_1	**C6**
Functional width	f	**0.5** mm
Functional length	l_4	**130** mm
Minimum hole diameter	D_{min2}	**110** mm
Orthogonal rake angle	γ	**-5** °
Inclination angle	λ_s	**-6** °

Drilling: DC175-05-20.000A1-WJ30RZ

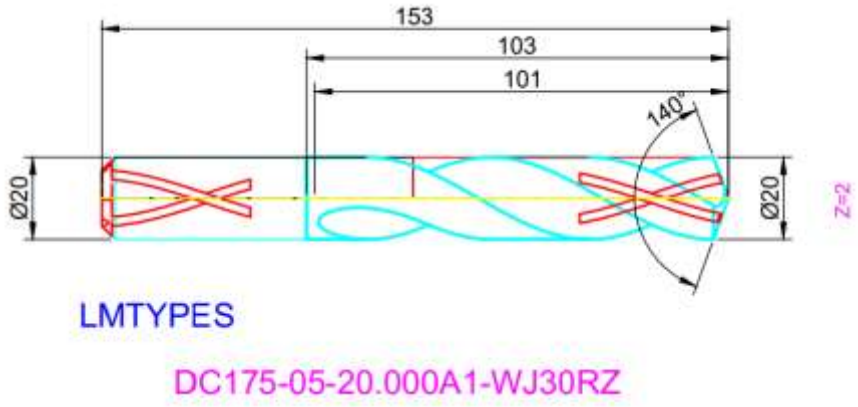

❖ **Step 3: Rough milling of the profile**

Fixturing diagram:

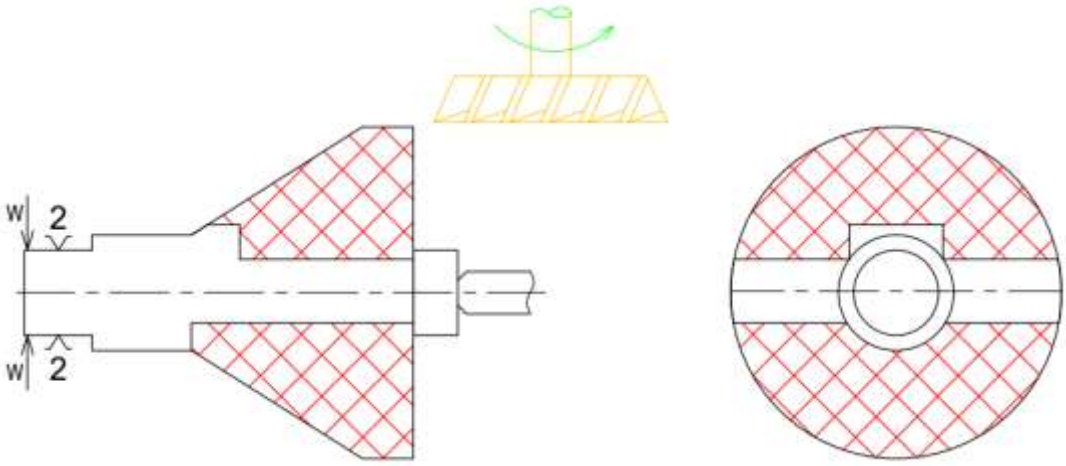

Figure 3-8. Fixturing diagram – setup 2, step 3

Cutting tools: Tool F5041.B16.040.Z06.08, Insert LNHU090404R-L55T WKP35G

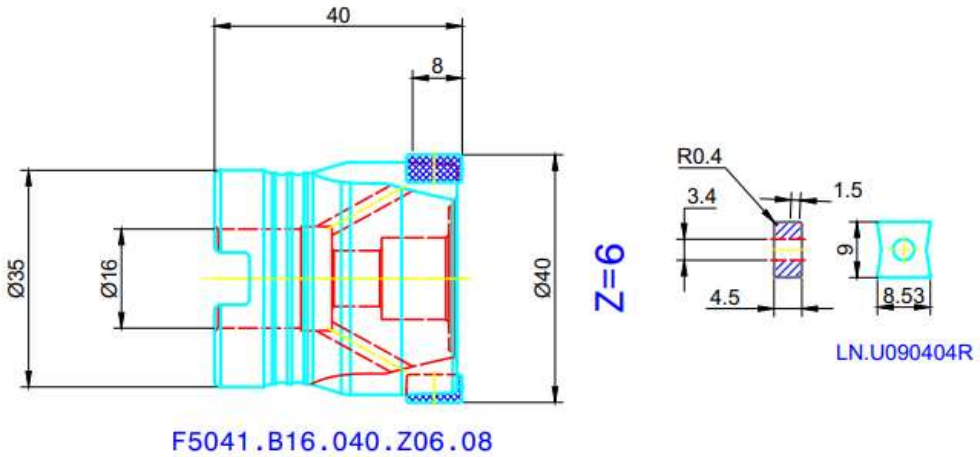

Figure 3-9. Milling tool F5041.B16.040.Z06.08

Rough milling:

- From the reference tables, the turning cutting conditions are:
- Feed per tooth: f_z = 0,15 (mm/tooth)
- Cutting speed: v_c = 200 (m/min)
- Spindle speed calculation:
- $n = \frac{v_c.1000}{\pi.D_c} = \frac{200.1000}{\pi.40} = 1591.54$ (rpm)
- Selected spindle speed n = 2000 (rpm)
- Feed rate: $V_f = n.\ Z_n.\ f_z$ = 2000.6.0,15 = 1800 (mm/min)
- Width of cut / Depth of cut:
- ae = 0,5.D = 0,5.40 = 20 (mm)

Finish milling:

- From the reference tables, the turning cutting conditions are:
- Feed per tooth: f_z = 0,12 (mm/tooth)
- Cutting speed: v_c = 250 (m/min)
- Spindle speed calculation:
- $n = \frac{v_c.1000}{\pi.D_c} = \frac{250.1000}{\pi.40} = 1989{,}43$ (rpm)
- Selected spindle speed n = 2000 (rpm)
- Feed rate: $V_f = n.\ Z_n.\ f_z$ = 2000.6.0,12 = 1440 (mm/min)
- Width of cut / Depth of cut:
- ae = 0,5.D = 0,5.40 = 20 (mm)

❖ **Step 4: Milling the stepped cylindrical profile**

Fixturing diagram:

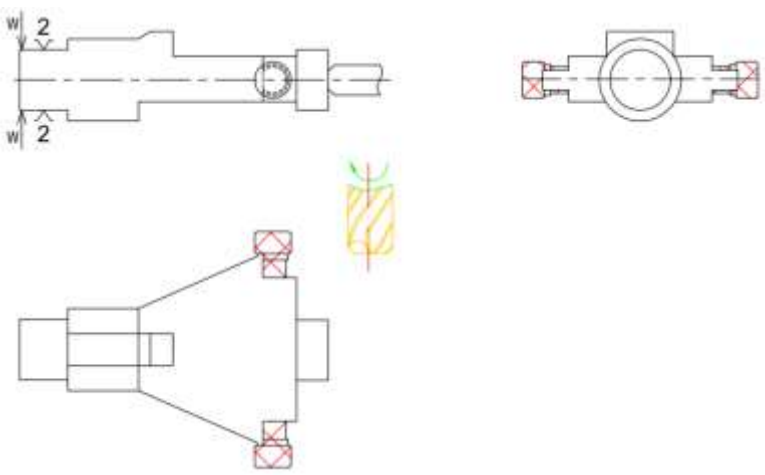

Figure 3-10. Fixturing diagram – setup 3, step 4

Cutting tools: Tool F4042.T22.025.Z04.08, Insert ADMT080308R-F56 WKP35S

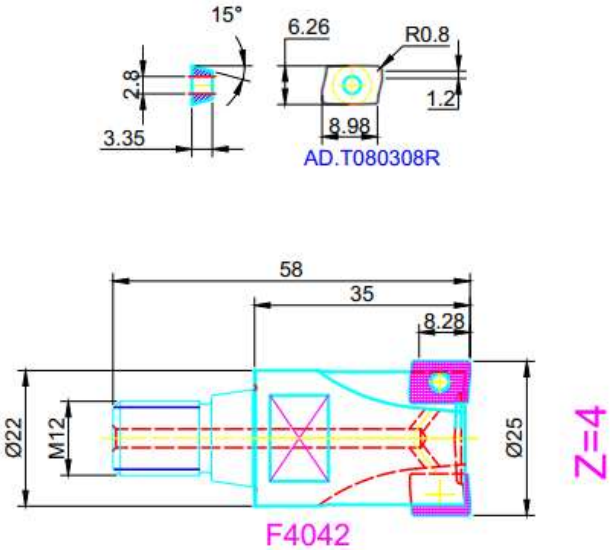

Figure 3-11. Milling tool F4042.T22.025.Z04.08

Rough milling:

- From the reference tables, the turning cutting conditions are:
- Feed per tooth: f_z = 0,18 (mm/tooth)
- Cutting speed: v_c = 1500 (m/min)
- Spindle speed calculation:
- $n = \frac{v_c.1000}{\pi.D_c} = \frac{1500.1000}{\pi.25} = 19098{,}59$ (rpm)
- Selected spindle speed n = 20000 (rpm)
- Feed rate: $V_f = n.\ Z_n.\ f_z$ = 20000.4.0,18 = 14400 (mm/min)
- Width of cut / Depth of cut:
- ae = 0,5.D = 0,5.25 = 12.5 (mm)

Finish milling:

- From the reference tables, the turning cutting conditions are:
- Feed per tooth: f_z = 0,12 (mm/tooth)
- Cutting speed: v_c = 1500 (m/min)
- Spindle speed calculation:
- $n = \frac{v_c.1000}{\pi.D_c} = \frac{1500.1000}{\pi.25} = 19098.59$ (rpm)
- Selected spindle speed n = 20000 (rpm)

- Feed rate: $V_f = n.\ Z_n.\ f_z = 20000.4.0{,}12 = 9600$ (mm/min)
- Width of cut / Depth of cut:
- ae = 0,5.D = 0,5.25 = 12.5 (mm)

❖ **Step 5: Hole milling**

Fixturing diagram:

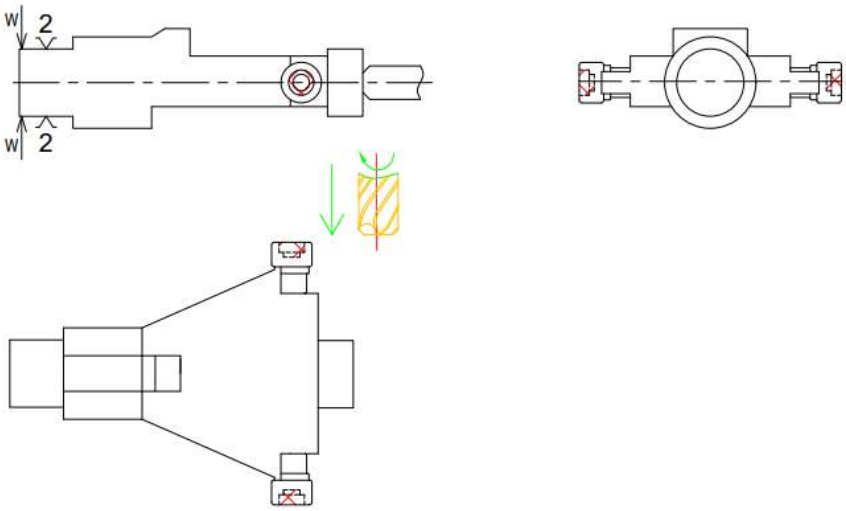

Figure 3-12. Fixturing diagram – setup 2, step 5

Cutting tool: Tool H4036217-20

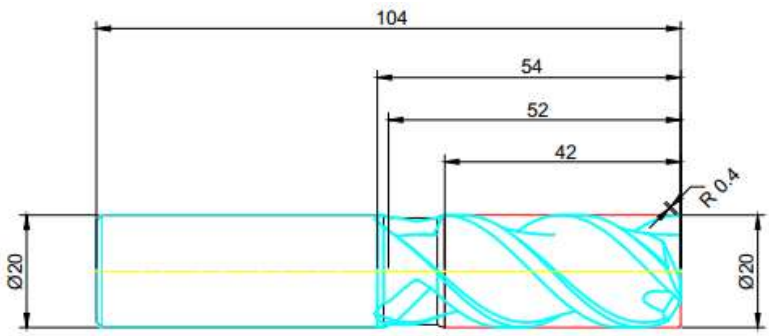

Figure 3-13. Milling tool H4036217-20

Rough milling:

- From the reference tables, the turning cutting conditions are:
- Feed per tooth: $f_z = 0{,}1$ (mm/tooth)
- Cutting speed: $v_c = 250$ (m/min)
- Spindle speed calculation:
- $n = \frac{v_c.1000}{\pi.D_c} = \frac{250.1000}{\pi.20} = 3978.87$ (rpm)
- Selected spindle speed n = 4000 (rpm)
- Feed rate: $V_f = n.\ Z_n.\ f_z = 4000.1.0{,}1 = 400$ (mm/min)

- Width of cut / Depth of cut:
- ae = 0,5.D = 0,5.20 = 10 (mm)

Finish milling:

- From the reference tables, the turning cutting conditions are:
- Feed per tooth: f_z = 0,08 (mm/tooth)
- Cutting speed: v_c = 320 (m/min)
- Spindle speed calculation:
- $n = \frac{v_c.1000}{\pi.D_c} = \frac{320.1000}{\pi.20} = 5092{,}95$ (rpm)
- Selected spindle speed n = 5200 (rpm)
- Feed rate: $V_f = n.\ Z_n.\ f_z$ = 5200.1.0,08 = 416 (mm/min)
- Width of cut / Depth of cut:
- ae = 0,5.D = 0,5.20 = 10 (mm)

❖ **Step 6: Milling profile 1**

Fixturing diagram:

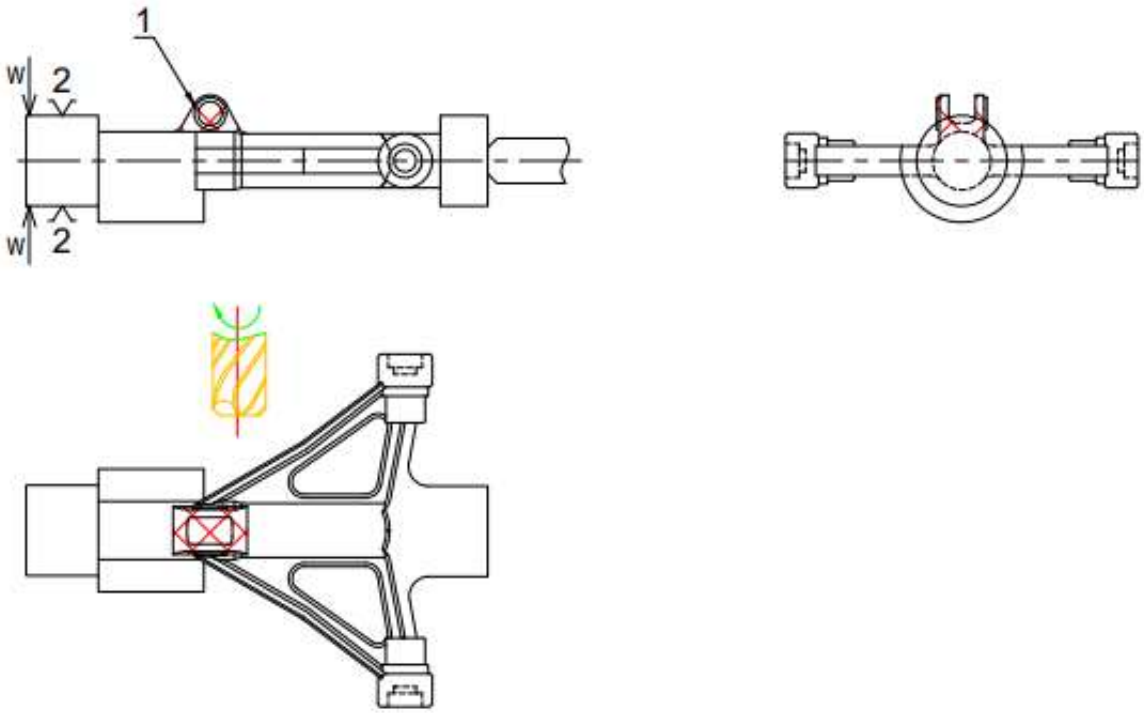

Figure 3-14. Fixturing diagram – setup 2, steps 6

Cutting tool: Tool H4036217-20

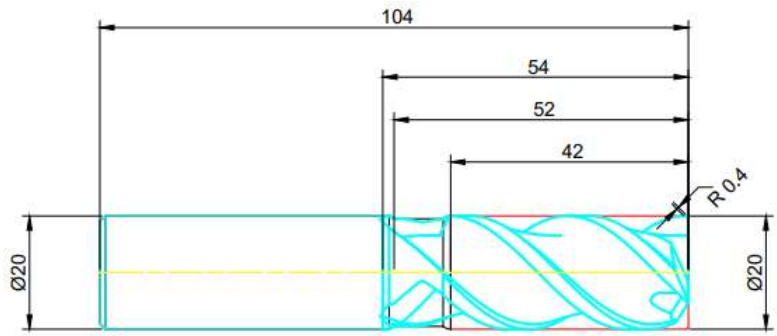

❖ **Step 7: Drilling and reaming ø20 hole**

Fixturing diagram:

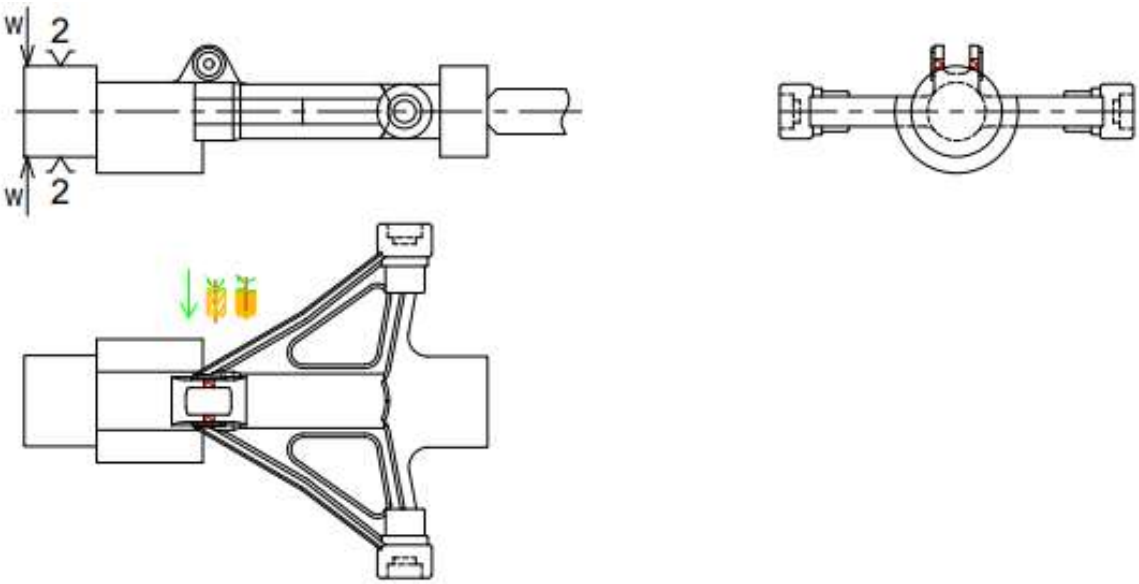

Figure 3-15. Fixturing diagram – setup 2, step 7

Cutting tools:

Drill: DC175-05-20.000A1-WJ30RZ

Reamer: F2162-20

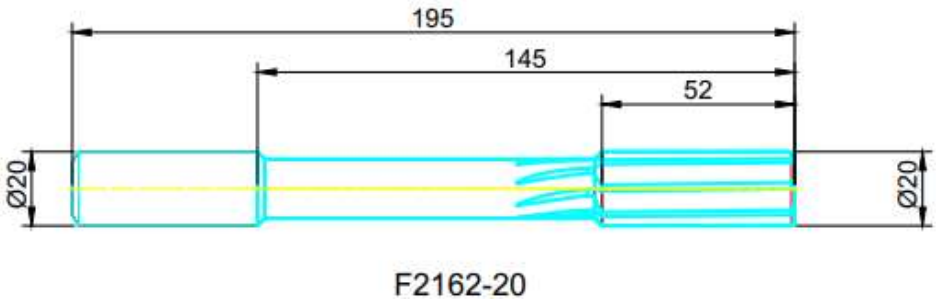

Figure 3-16. Reaming tool F2162-20

Reaming:

- According to the reference table, the cutting conditions are:

- Feed per tooth: f_z = 0,27 (mm/tooth)
- Cutting speed: v_c = 200 (m/min)
- Spindle speed calculation:
- $n = \frac{v_c.1000}{\pi.D_c} = \frac{200.1000}{\pi.20} = 3183.09$ (rpm)
- Selected spindle speed n = 3500 (rpm)
- Feed rate: $V_f = n.\ Z_n.\ f_z$ = 3500.8.0,27 = 7560 (mm/min)

❖ **Steps 8 & 9: Pocket profile milling and ø12 hole drilling**

Fixturing diagram:

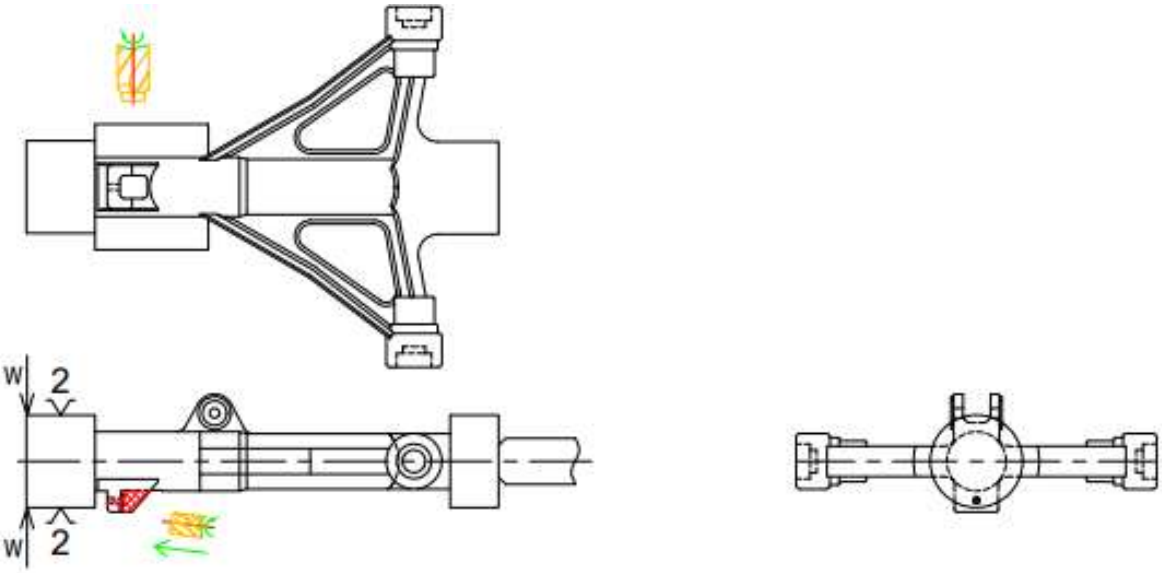

Figure 3-17. Fixturing diagram – setup 2, steps 8+9

Cutting tools:

Milling: H602111-10

Drilling: A1163-12

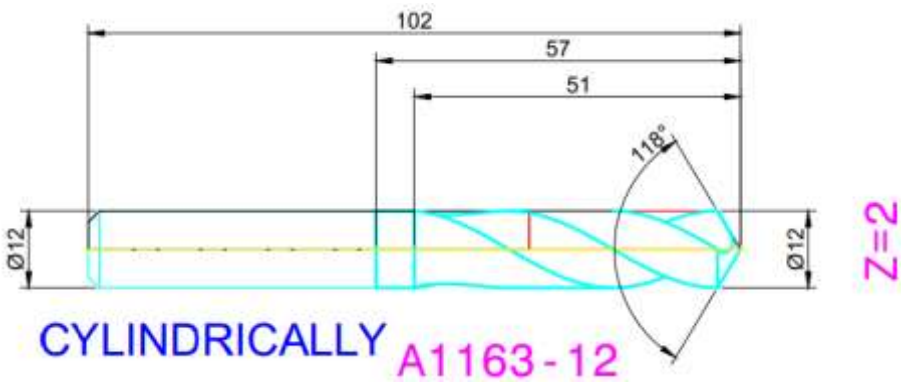

Figure 3-18. Reaming tool A1163-12

Machining parameters:

Chế độ cắt	Phay	Khoan
Vận tốc cắt (Vc)	250 m/ph	250 m/ph
Lượng chạy dao (f)	0.33 mm	0.53 mm
Chiều sâu cắt (t)	0.5 mm	0.2 mm

❖ **Step 10: Milling profile 3**

Fixturing diagram:

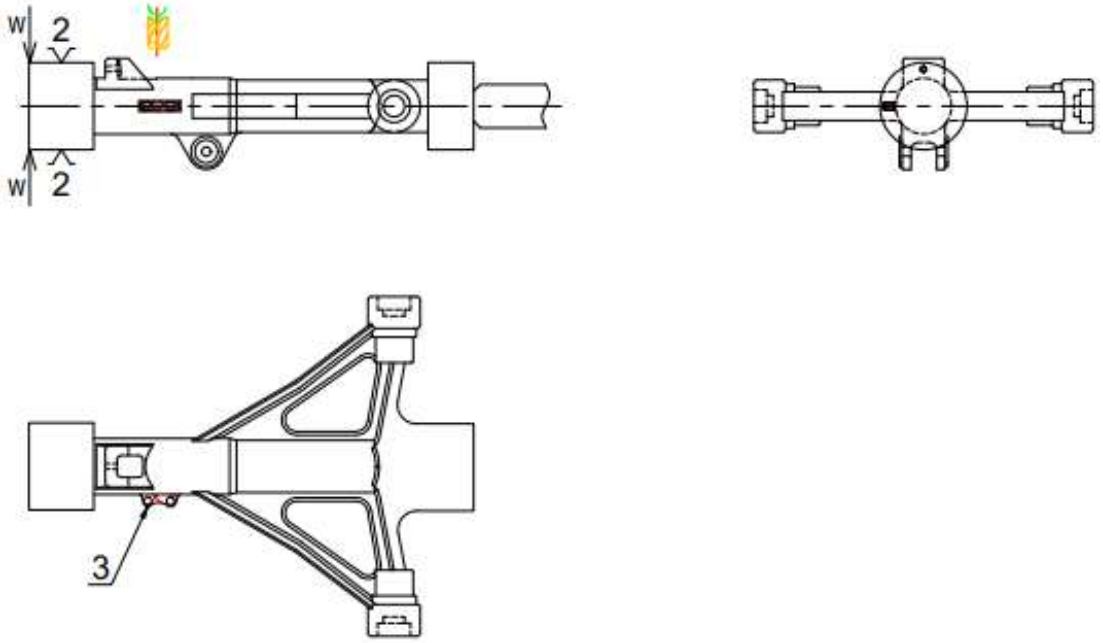

Figure 3-19. Fixturing diagram – setup 2, steps 10

Cutting tool: H602111-10

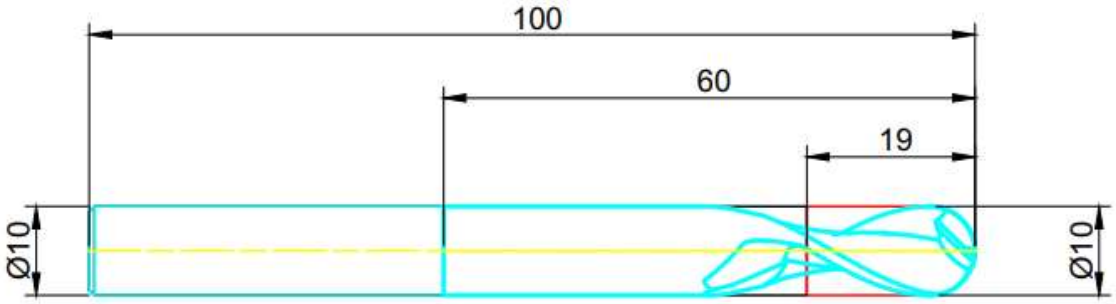

Figure 3-20. Milling tool H602111-10

Machining parameters:

Chế độ cắt	Phay thô	Phay tinh
Vận tốc cắt (Vc)	250 m/ph	320 m/ph
Lượng chạy dao (f)	0.33 mm	0.4 mm
Chiều sâu cắt (t)	0.5 mm	0.2 mm

❖ Step 11+12: Drilling and reaming 2x ø18 holes

Fixturing Diagram:

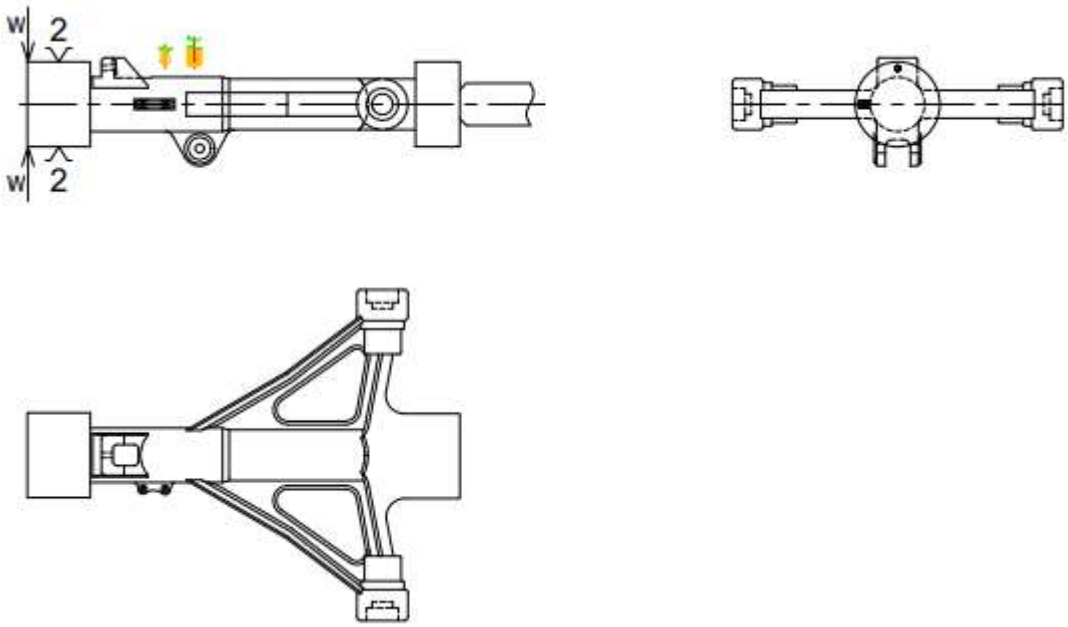

Figure 3-21. Fixturing diagram – setup 2, steps 11+12

Cutting tools:

Drill: DC150-03-17.800A0-WJ30RE

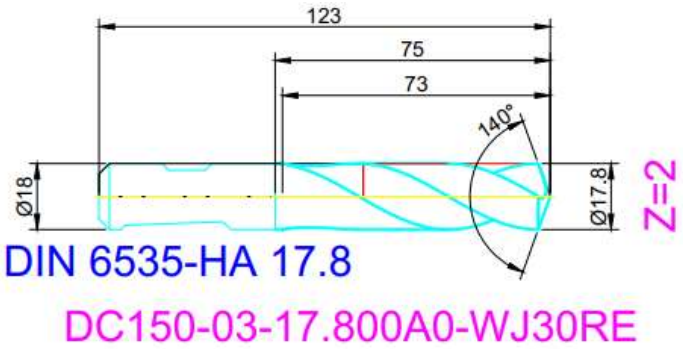

Reamer: F2162-18

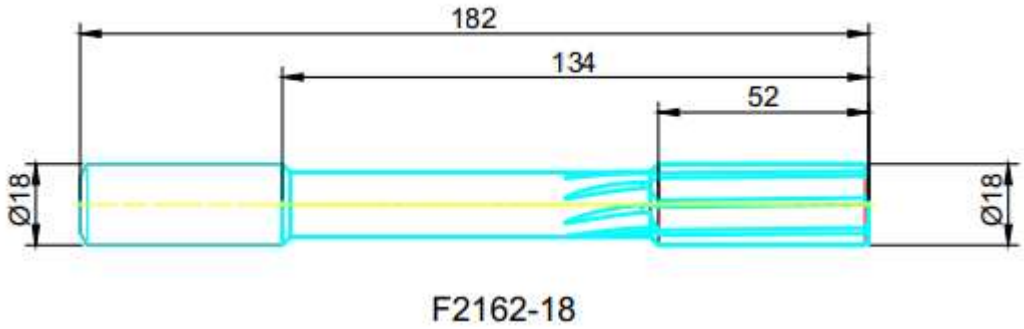

Machining parameters:

Chế độ cắt	Khoan	Doa
Vận tốc cắt (Vc)	250 m/ph	200 m/ph
Lượng chạy dao (f)	0.53 mm/z	0.2 mm/z
Chiều sâu cắt (t)	24 mm	24 mm

3.3.3. Setup 3

❖ **Step 1: Turning Ø96 hole**

Fixturing diagram:

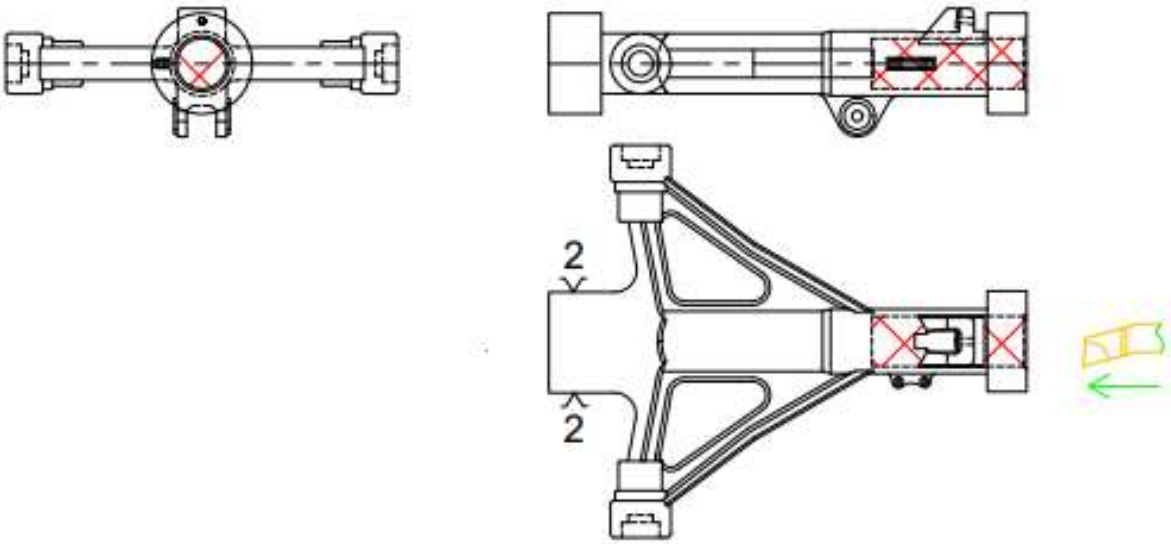

Figure 3-22. Fixturing diagram – setup 3, step 1

Cutting tools:

Rough Turning Tool: D4120-05-59.00F40-P48

Insert: P4841P-8R-E57 WKP35S

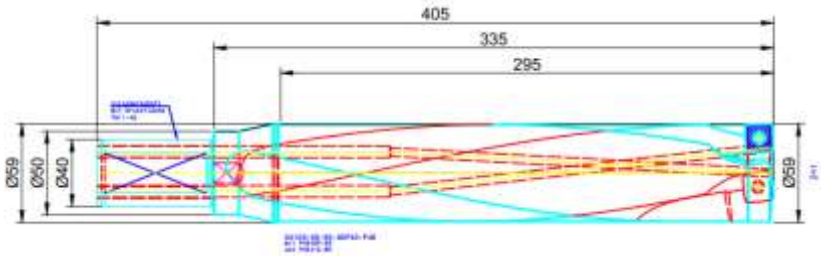

Finishing tool: A25T-SDQCR11

Insert: DCMT11T304-FP4 WPP20S

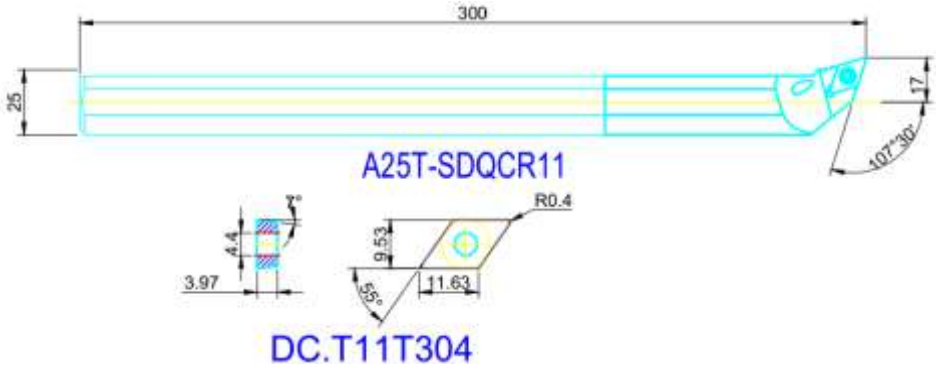

Machining parameters:

Chế độ cắt	Tiện thô	Tiện tinh
Vận tốc cắt (Vc)	90 m/ph	400 m/ph
Lượng chạy dao (f)	0.2 mm/z	0.1 mm/z
Chiều sâu cắt (t)	40 mm	40 mm

Step 2: Finish milling of contours

Fixturing Diagram:

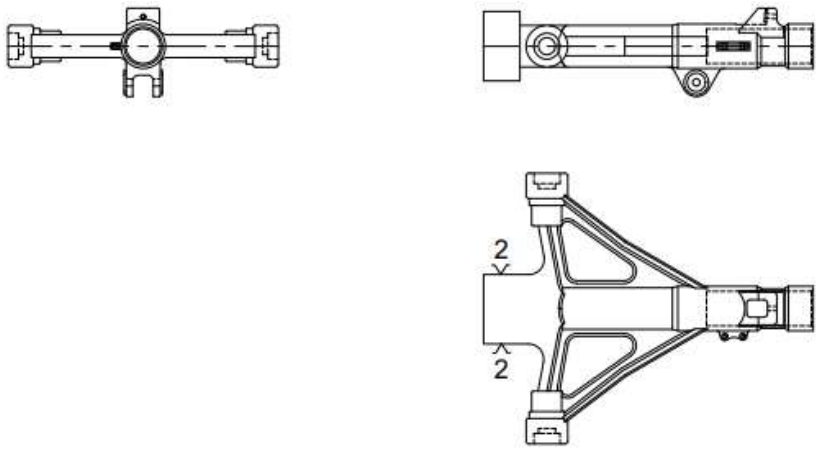

Figure 3-23. Fixturing diagram – setup 3, step 2

Cutting Tool: H602111-10

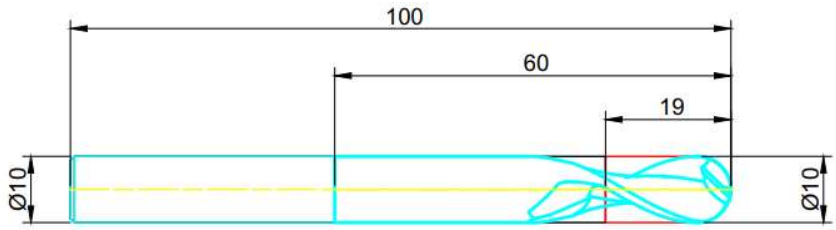

Machining parameters:

Chế độ cắt	Phay thô	Phay tinh
Vận tốc cắt (Vc)	250 m/ph	320 m/ph
Lượng chạy dao (f)	0.33 mm	0.4 mm
Chiều sâu cắt (t)	0.5 mm	0.2 mm

3.3.4. Slot machining

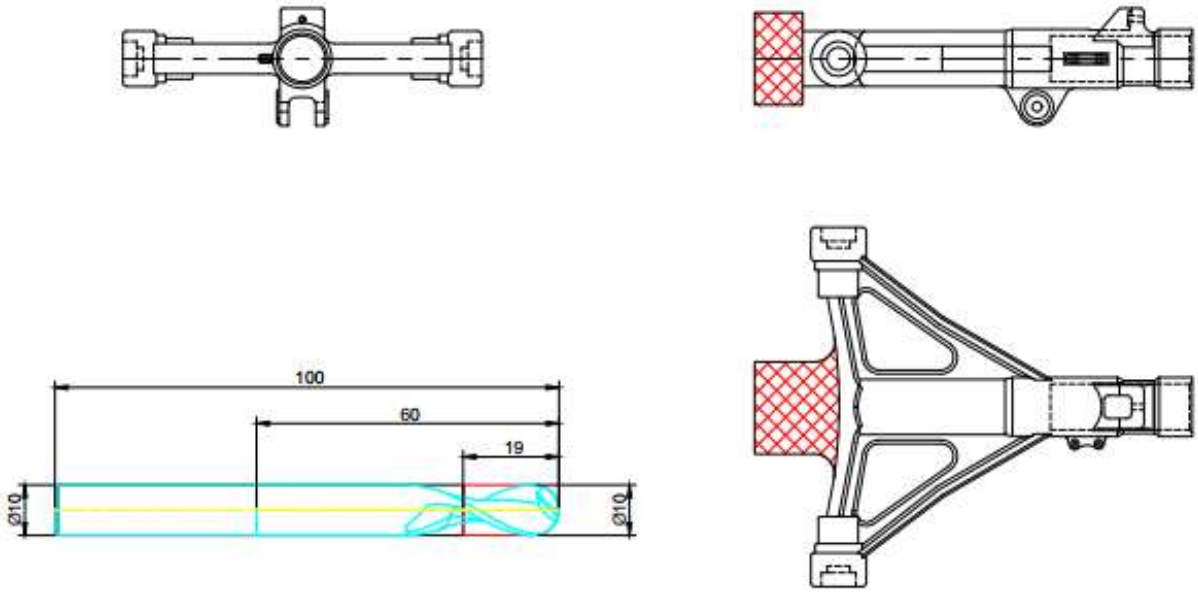

Figure 3-24. Grooving operation

CHAPTER 4. PROCESS DESIGN FOR MANUFACTURING THE LANDING LOWER TORQUE LINK

4. 1. Selection of workpiece (stock material)

Currently, there are various methods for producing workpieces worldwide. However, in the aerospace industry, most components are manufactured from solid metal/alloy billets or metal/alloy plates.

4.1.1. High strength and consistency

Mechanical strength: Solid metal/alloy billets offer high mechanical strength, which is essential to withstand the large loads and stresses encountered during flight conditions.

Structural consistency: Solid billets have a uniform grain structure, minimizing defects such as voids or inclusions, thereby ensuring the integrity and reliability of the component.

4.1.2. Load bearing and fatigue resistance

Excellent load-bearing capability: Aerospace components are subjected to constantly varying loads; therefore, the ability of solid metal/alloy billets to endure such loads is critical.

Fatigue resistance: Superior fatigue resistance compared to other manufacturing methods, reducing the risk of crack initiation or failure under cyclic loading.

4.1.3. Machinability

Good machinability: Solid billets can be easily machined using various methods such as milling, turning, drilling, and grinding.

4.1.4. Reliability

High reliability: Using solid billets helps minimize the risk of defects and failures.

Thermal resistance: Capable of withstanding high temperatures while maintaining good mechanical properties under thermal variations.

→ Selected material: Solid billet, rectangular block shape, dimensions: 158 × 340 × 30 mm

4. 2. Machine tool selection

To determine the appropriate CNC machining center for the component, one must consider machine specifications such as the maximum tool travel, which must exceed the workpiece dimensions, and the maximum spindle speed, among others.

Based on these criteria, the VF-2-FE Vertical CNC Milling Machine is selected.

Figure 4-1. VF-2-FE Vertical 3 axis CNC Milling Machine

TRAVEL	**METRIC SYSTEM**
X-axis	762 mm
Y-axis	406 mm
Z-axis	508 mm
Spindle nose to table (~max)	610 mm
Spindle nose to table (~min)	102 mm
Maximum power	22.4 kW
Maximum speed	10000 rpm
Maximum torque	122 Nm @ 2000 rpm
Table length	914 mm
Table width	356 mm
T-slot width	16 mm
T-slot spacing	125 mm
Number of T-slots	3
Maximum table load (evenly distributed)	1361 kg
X-axis feedrate	25.4 m/min
Y-axis feedrate	25.4 m/min

Z-axis feedrate	25.4 m/min
Maximum cutting speed	16.5 m/min
Type tool	SMTC
Tool capacity	30+1
Maximum tool diameter (adjacent tool pockets empty)	127 mm
Maximum tool diameter (adjacent tools installed)	64 mm
aximum tool length (from spindle nose)	279 mm
Maximum tool weight	5.4 kg

4. 3. Machining process plan

Setup 1

- Step 1: Face milling
- Step 2: Pocket milling
- Step 3 + 4: Rough and finish profile milling
- Step 5: Top surface milling

Setup 2

- Step 1: Face milling of the opposite end
- Step 2: Pocket milling
- Step 3: Through-pocket milling
- Step 4: Bottom surface milling

Setup 3

- Step 1 + 2: Through drilling and reaming Ø20 hole
- Step 3 + 4: Reverse side through drilling and reaming Ø20 hole

4.3.1. Setup 1

❖ **Step 1: Face milling**

Clamping diagram:

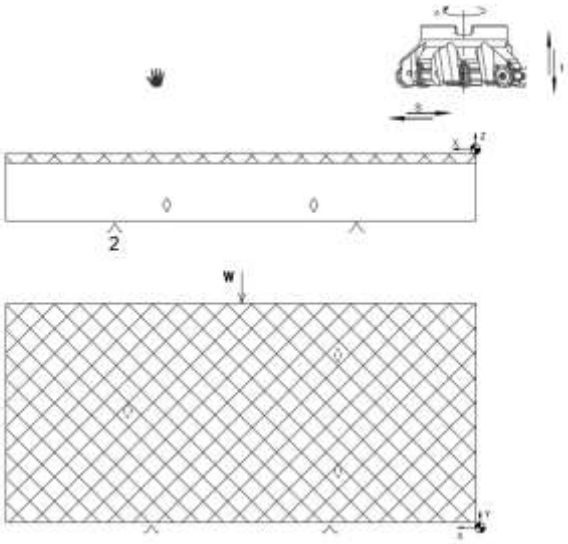

Figure 4-2. Fixturing diagram – setup 1, step 1

Cutting tool:

Milling tool: VPX200

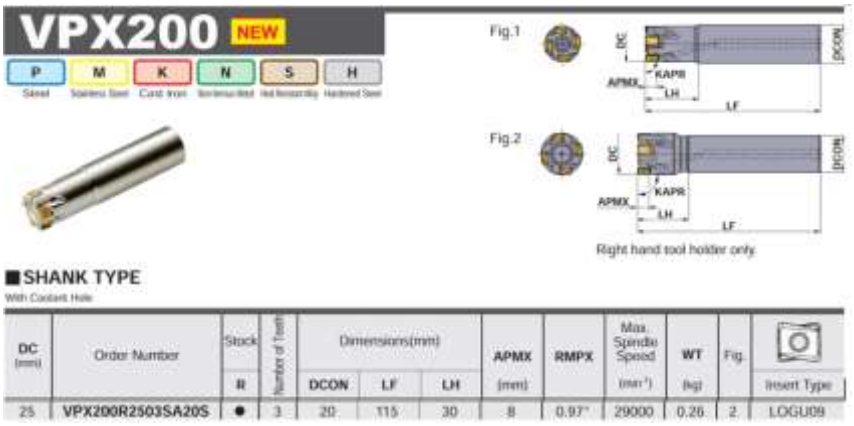

Figure 4-3. Milling tool VPX200

Dry cutting
Cutting Speed

	Work Material	Characteristics	Cutting Conditions	Grade	ae (mm) ≤0.25DC	0.25–0.5DC	0.5–0.75DC	DC(Slot)
					vc (m/min)			
N	Aluminium Alloy	Content Si < 5%	● ● ✱	TF15	600 (400–1000)	600 (400–1000)	600 (400–1000)	600 (400–1000)

	Work Material	Characteristics	ae (mm)	Cutting Conditions	DC (mm) ø16–ø18 ap (mm)	ø16–ø18 fz (mm/t.)	ø20–ø25 ap (mm)	ø20–ø25 fz (mm/t.)	ø28–ø63 ap (mm)	ø28–ø63 fz (mm/t.)
N	Aluminium Alloy	Content Si < 5%	≤0.25DC	● ●	≤6	0.1 –0.2	≤8	0.1 –0.25	≤8	0.1 –0.25
				✱	≤6	0.1 –0.15	≤8	0.1 –0.2	≤8	0.1 –0.2
			0.25–0.5DC	● ●	≤5	0.1 –0.15	≤8	0.1 –0.2	≤8	0.1 –0.2
				✱	≤5	0.08–0.12	≤8	0.1 –0.15	≤8	0.1 –0.15
			0.5–0.75DC	● ●	≤4	0.08–0.12	≤6	0.06–0.15	≤6	0.08–0.15
				✱	≤4	0.06–0.1	≤6	0.06–0.15	≤6	0.08–0.15
			DC(Slot)	● ●	≤2	0.06–0.1	≤4	0.06–0.15	≤4	0.08–0.15
				✱	≤2	0.06–0.08	≤4	0.06–0.12	≤4	0.08–0.12

- From the reference tables, the turning cutting conditions are:
- Feed per tooth: $f_z = 0,1$ (mm/tooth)

- Cutting speed: v_c = 600 (m/min)
- Spindle speed calculation:
- $n = \frac{v_c.1000}{\pi.D_c} = \frac{600.1000}{\pi.25} = 7643$ (rpm)
- Selected spindle speed n = 8000 (rpm)
- Feed rate: $V_f = n.\ Z_n.\ f_z$ = 8000.3.0,1 = 2400 (mm/min)
- Width of cut / Depth of cut:
- ae = 0,5.D = 0,5.25 = 12.5 (mm)

❖ **Step 2: Pocket milling**

Clamping Diagram:

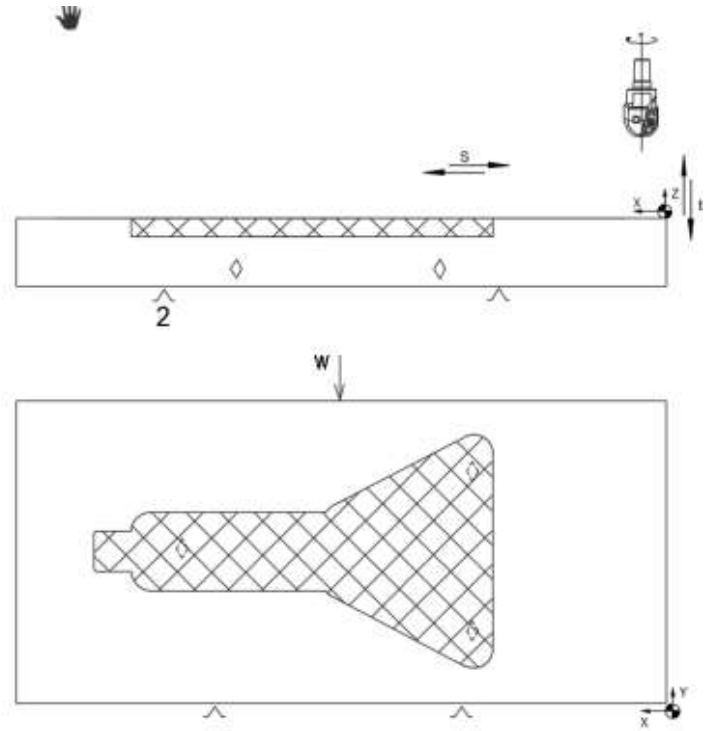

Figure 4-4. ixturing diagram – setup 1, step 2

Cutting tool:

Milling tool: IMX10C3A100R25008

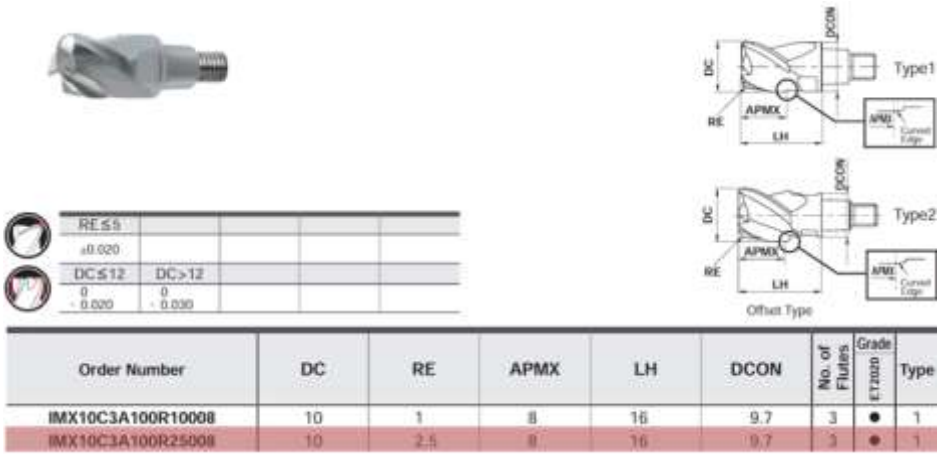

Order Number	DC	RE	APMX	LH	DCON	No. of Flutes	Grade ET2020	Type
IMX10C3A100R10008	10	1	8	16	9.7	3	●	1
IMX10C3A100R25008	10	2.5	8	16	9.7	3	●	1

Figure 4-5. Milling tool IMX10C3A100R25008

■ Slot milling (L/D=3) (mm)

Work Material	Aluminium alloy A6061, A7075				
DC	Cutting Speed (m/min)	Revolution (min^{-1})	Feed per Tooth (mm/t.)	Feed rate (mm/min)	Depth of cut ap
10	500	6400	0.068	3300	5

- From the reference tables, the turning cutting conditions are:
- Feed per tooth: f_z = 0,068 (mm/tooth)
- Cutting speed: v_c = 500 (m/min)
- Spindle speed calculation:
- $n = \frac{v_c.1000}{\pi.D_c} = \frac{500.1000}{\pi.25} = 6400$ (rpm)
- Selected spindle speed n = 6400 (rpm)
- Feed rate: $V_f = n.\ Z_n.\ f_z$ = 6400.3.0,068 = 1305,6 (mm/min)
- Width of cut / Depth of cut:
- ae = 0,5.D = 0,5.10 = 5 (mm)

❖ **Step 3+4: Rough and finish profile milling**

Clamping diagram:

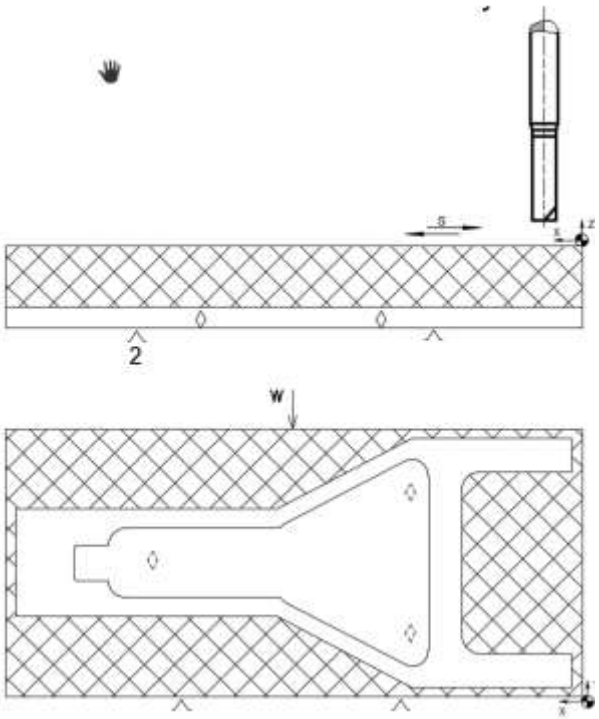

Figure 4-6. Fixturing diagram – setup 1, step 3+4

Cutting tool:

Milling tool: SEG4080SA

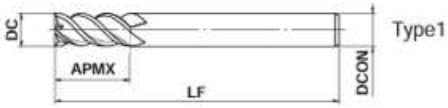

DC≤12	DC>12		
0 - 0.020	0 - 0.030		
DCON=6	8≤DCON≤10	12≤DCON≤16	20≤DCON≤25
0 - 0.008	0 - 0.009	0 - 0.011	0 - 0.013

●4 flute end mill with irregular helix angle for aluminium alloy.

(mm)

Order Number	DC	APMX	LF	DCON	No. of Flutes	Stock	Type
SEG4060SA	6	14	50	6	4	●	1
SEG4080SA	8	19	60	8	4	●	1

Figure 4-7. Milling tool SEG4080SA

Side milling

Work Material	Aluminium alloy Plastics		Pure copper	
Dia. DC (mm)	Revolution (min^{-1})	Feed rate (mm/min)	Revolution (min^{-1})	Feed rate (mm/min)
6	9600	1700	4800	840
8	7200	1800	3600	900
Depth of cut	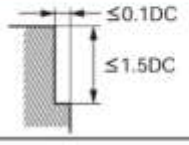			

Rough milling:

- From the reference tables, the turning cutting conditions are:
- Feed per tooth: f_z = 0,0625 (mm/tooth)
- Cutting speed: v_c = 180.95 (m/min)
- Spindle speed calculation:
- $n = \frac{v_c.1000}{\pi.D_c} = 7200$ (rpm)
- Selected spindle speed n = 7200 (rpm)
- Feed rate: $V_f = n.\ Z_n.\ f_z$ = 1800 (mm/min)
- Width of cut / Depth of cut:
- ae = 0,1.D = 0,8 (mm)

Finish milling:

- From the reference tables, the turning cutting conditions are:
- Feed per tooth: f_z = 0,05 (mm/tooth)
- Cutting speed: v_c = 180.95 (m/min)
- Spindle speed calculation:
- $n = \frac{v_c.1000}{\pi.D_c} = 7200$ (rpm)
- Selected spindle speed n = 7200 (rpm)
- Feed rate: $V_f = n.\ Z_n.\ f_z$ = 2000.6.0,12 = 1440 (mm/min)
- Width of cut / Depth of cut:
- ae = 0,1.D = 0,8 (mm)

❖ **Step 5+6: Rough and finish milling of top surface**

Clamping diagram:

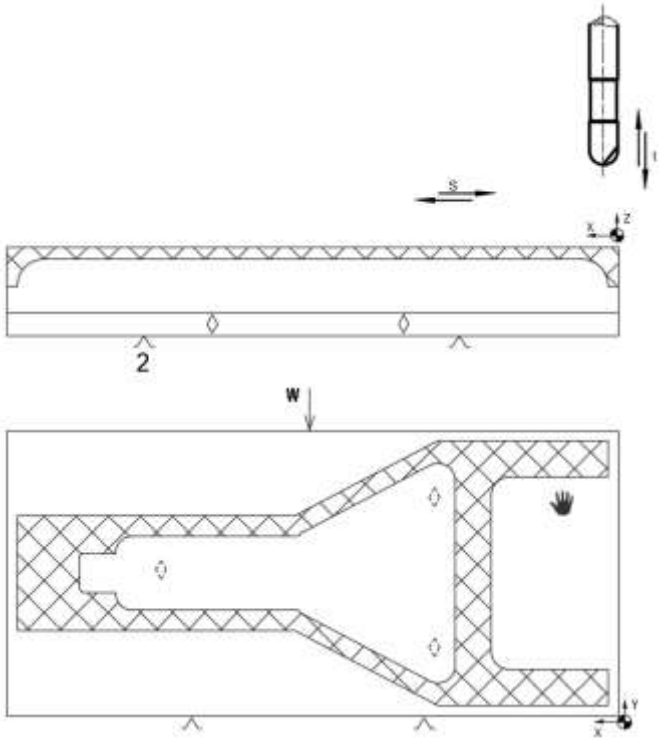

Figure 4-8. Fixturing diagram – setup 1, step 5+6

Cutting tool:

Milling tool: DLC2MBR0300

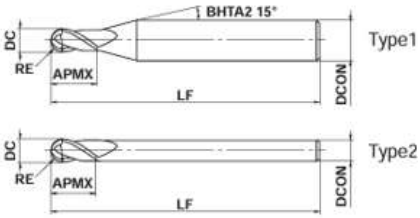

RE≤6	RE>6			
±0.01	±0.02			
DC≤12	DC>12			
0 / - 0.020	0 / - 0.030			
4≤DCON≤6	8≤DCON≤10	12≤DCON≤16	DCON=20	
0 / - 0.008	0 / - 0.009	0 / - 0.011	0 / - 0.013	

●2 flute ball nose end mill with new high welding resistance DLC coating, ideal for machining non-ferrous materials.

(mm)

Order Number	RE	DC	APMX	LF	DCON	No. of Flutes	Stock	Type
DLC2MBR0300	3	6	12	80	6	2	●	2

Figure 4-9. Milling tool DLC2MBR0300

Side milling

Work Material	Aluminium alloy Plastics		Pure copper	
Dia. DC (mm)	Revolution (min^{-1})	Feed rate (mm/min)	Revolution (min^{-1})	Feed rate (mm/min)
6	9600	1700	4800	840
8	7200	1800	3600	900
Depth of cut	≤0.1DC ≤1.5DC DC:Dia.			

Rough milling:

- From the reference tables, the turning cutting conditions are:
- Feed per tooth: f_z = 0,04 (mm/tooth)
- Cutting speed: v_c = 300 (m/min)
- Spindle speed calculation:
- $n = \frac{v_c.1000}{\pi.D_c} = 6200$ (rpm)
- Selected spindle speed n = 6200 (rpm)
- Feed rate: $V_f = n.\ Z_n.\ f_z$ = 744 (mm/min)
- Width of cut / Depth of cut:
- ae = 0,1.D = 0,8 (mm)

Finish milling:

- From the reference tables, the turning cutting conditions are:
- Feed per tooth: f_z = 0,04 (mm/tooth)
- Cutting speed: v_c = 230 (m/min)
- Spindle speed calculation:
- $n = \frac{v_c.1000}{\pi.D_c} = 5000$ (rpm)
- Selected spindle speed n = 7200 (rpm)
- Feed rate: $V_f = n.\ Z_n.\ f_z$ = 2000.6.0,12 = 600 (mm/min)
- Width of cut / Depth of cut:
- ae = 0,1.D = 0,8 (mm)

4.3.2. Setup 2

❖ **Step 1: Face milling**

Clamping diagram:

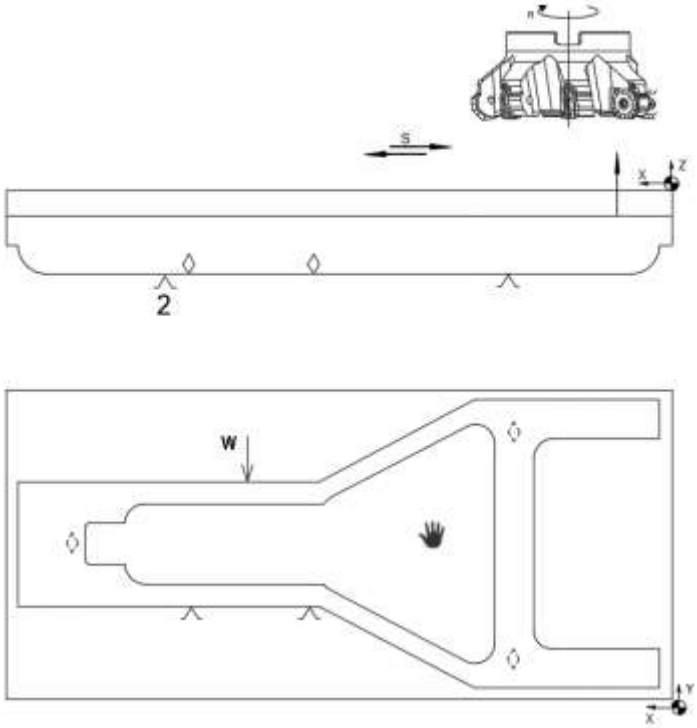

Figure 4-10. Fixturing diagram – setup 2, step 1

Cutting tool:

Milling cutter: VPX200

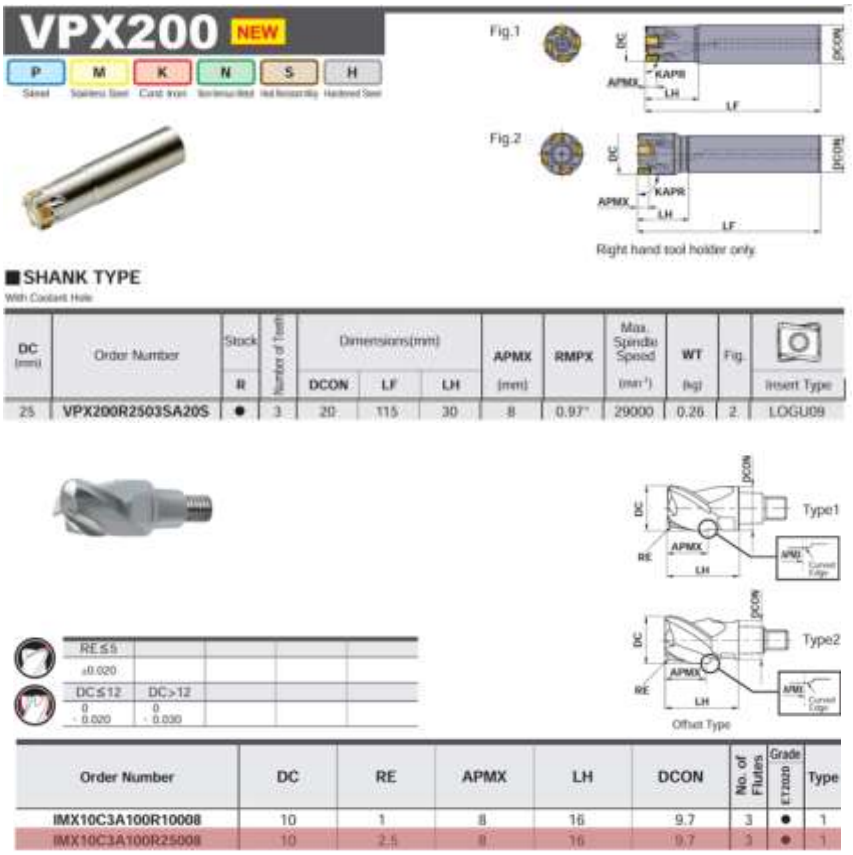

Machining parameters

Work Material		Characteristics	ae (mm)	Cutting Conditions	DC (mm) ø16–ø18 ap (mm)	ø16–ø18 fz (mm/t.)	ø20–ø25 ap (mm)	ø20–ø25 fz (mm/t.)	ø28–ø63 ap (mm)	ø28–ø63 fz (mm/t.)
N	Aluminium Alloy	Content Si < 5%	≤0.25DC	● ●	≤6	0.1 –0.2	≤8	0.1 –0.25	≤8	0.1 –0.25
				✻	≤6	0.1 –0.15	≤8	0.1 –0.2	≤8	0.1 –0.2
			0.25–0.5DC	● ●	≤5	0.1 –0.15	≤8	0.1 –0.2	≤8	0.1 –0.2
				✻	≤5	0.08–0.12	≤8	0.1 –0.15	≤8	0.1 –0.15
			0.5–0.75DC	● ●	≤4	0.08–0.12	≤6	0.06–0.15	≤6	0.08–0.15
				✻	≤4	0.06–0.1	≤6	0.06–0.15	≤6	0.08–0.15
			DC(Slot)	● ●	≤2	0.06–0.1	≤4	0.06–0.15	≤4	0.08–0.15
				✻	≤2	0.06–0.08	≤4	0.06–0.12	≤4	0.08–0.12

- From the reference tables, the turning cutting conditions are:
- Feed per tooth: $f_z = 0,1$ (mm/tooth)
- Cutting speed: $v_c = 600$ (m/min)
- Spindle speed calculation:
- $n = \frac{v_c.1000}{\pi.D_c} = \frac{600.1000}{\pi.25} = 7643$ (rpm)
- Selected spindle speed n = 8000 (rpm)
- Feed rate: $V_f = n.\ Z_n.\ f_z = 8000.3.0,1 = 2400$ (mm/min)
- Width of cut / Depth of cut:
- ae = 0,5.D = 0,5.25 = 12.5 (mm)

❖ **Step 2: Pocket milling**

Clamping diagram:

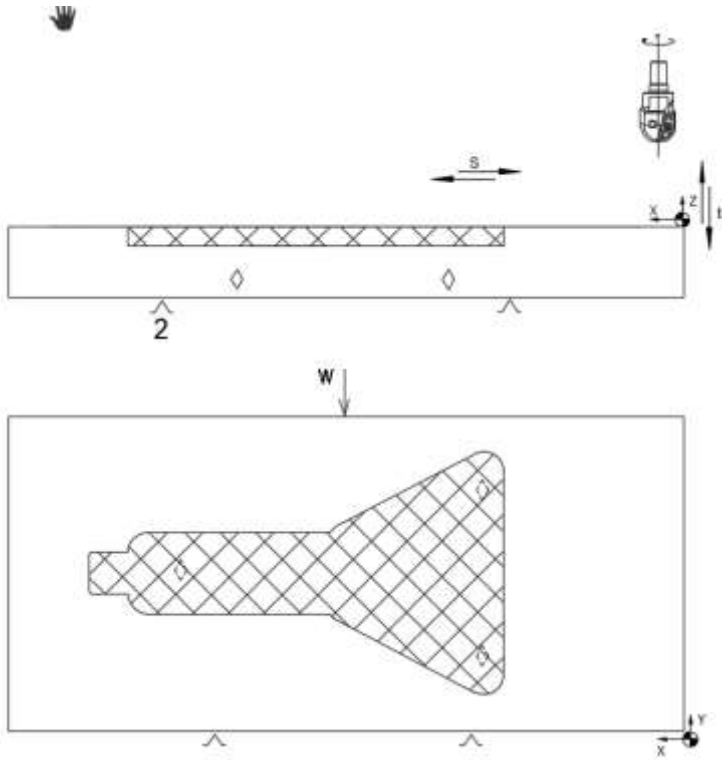

Figure 4-11. Fixturing diagram – setup 2, step 2

Cutting tool:

Milling tool: IMX10C3A100R25008

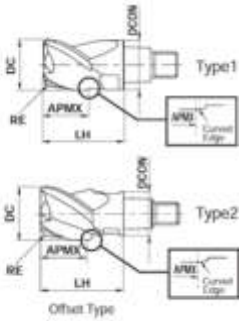

RE≤5				
+0.020				
DC≤12	DC>12			
0 / -0.020	0 / -0.030			

Order Number	DC	RE	APMX	LH	DCON	No. of Flutes	Grade ET2020	Type
IMX10C3A100R10008	10	1	8	16	9.7	3	●	1
IMX10C3A100R25008	10	2.5	8	16	9.7	3	●	1

Machining parameters

■ Slot milling (L/D=3) (mm)

Work Material	Aluminium alloy A6061, A7075				
DC	Cutting Speed (m/min)	Revolution (min^{-1})	Feed per Tooth (mm/t.)	Feed rate (mm/min)	Depth of cut ap
10	500	6400	0.068	3300	5

- From the reference tables, the turning cutting conditions are:
- Feed per tooth: f_z = 0,068 (mm/tooth)
- Cutting speed: v_c = 500 (m/min)
- Spindle speed calculation:
- $n = \frac{v_c.1000}{\pi.D_c} = \frac{500.1000}{\pi.25} = 6400$ (rpm)
- Selected spindle speed n = 6400 (rpm)
- Feed rate: $V_f = n.\ Z_n.\ f_z$ = 6400.3.0,068 = 1305,6 (mm/min)
- Width of cut / Depth of cut:
- ae = 0,5.D = 0,5.10 = 5 (mm)

❖ **Step 3: Through pocket milling**

Clamping diagram:

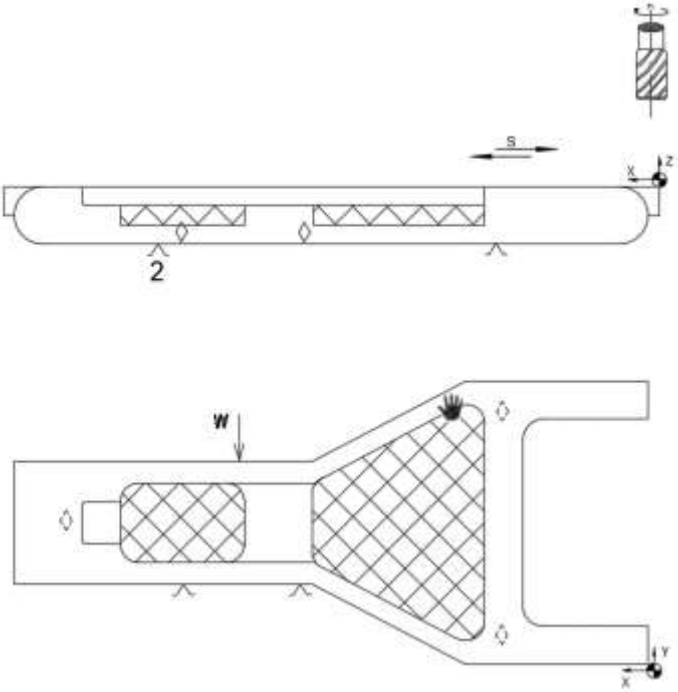

Figure 4-12. Fixturing diagram – setup 2, step 3

Cutting tool:

Milling tool: C2MAD1200

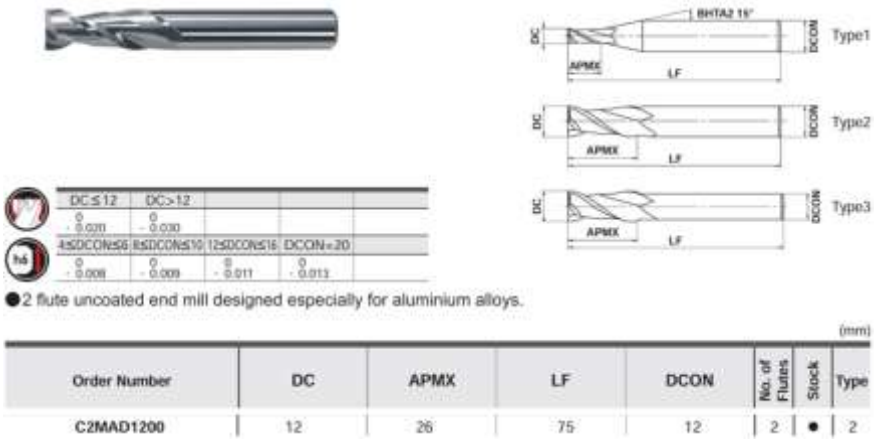

Figure 4-13. Milling tool C2MAD1200

Slotting

Work Material	Aluminium alloy		Aluminium alloy casting	
Dia. DC (mm)	Revolution (min^{-1})	Feed rate (mm/min)	Revolution (min^{-1})	Feed rate (mm/min)
10	7600	1200	6400	800
12	6400	1200	5300	800
16	4800	1000	4000	720
20	3800	970	3200	660
Depth of cut	DC ≤1DC (MAX. 12mm) DC:Dia.			

- From the reference tables, the turning cutting conditions are:
- Feed per tooth: f_z = 0,2 (mm/tooth)
- Cutting speed: v_c = 241.27 (m/min)
- Spindle speed calculation:
- $n = \frac{v_c.1000}{\pi.D_c} = 6400$ (rpm)
- Selected spindle speed n = 6400 (rpm)
- Feed rate: $V_f = n.\ Z_n.\ f_z = 1200$ (mm/min)
- Width of cut / Depth of cut:
- ae = D = 12 (mm)

❖ **Step 4+5: Rough and finish milling of bottom surface**

Clamping diagram:

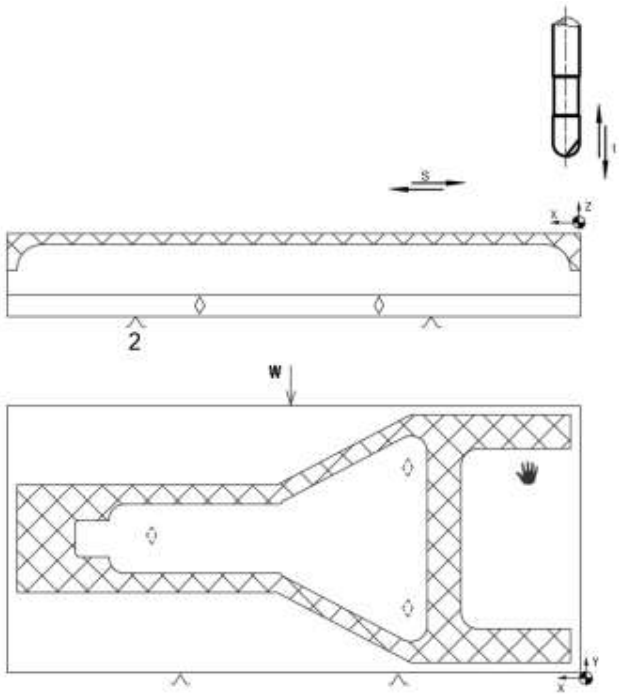

Figure 4-14. Fixturing diagram – setup 2, step 4+5

Cutting tool:

Milling cutter: DLC2MBR0300

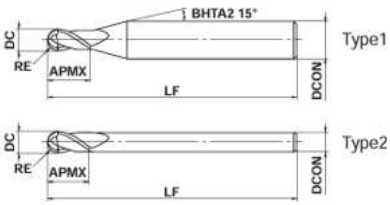

RE≤6	RE>6			
±0.01	±0.02			
DC≤12	DC>12			
0 / - 0.020	0 / - 0.030			
4≤DCON≤6	8≤DCON≤10	12≤DCON≤16	DCON=20	
0 / - 0.008	0 / - 0.009	0 / - 0.011	0 / - 0.013	

●2 flute ball nose end mill with new high welding resistance DLC coating, ideal for machining non-ferrous materials.

(mm)

Order Number	RE	DC	APMX	LF	DCON	No. of Flutes	Stock	Type
DLC2MBR0300	3	6	12	80	6	2	●	2

■Side milling

Work Material	Aluminium alloy Plastics		Pure copper	
Dia. DC (mm)	Revolution (min^{-1})	Feed rate (mm/min)	Revolution (min^{-1})	Feed rate (mm/min)
6	9600	1700	4800	840
8	7200	1800	3600	900
Depth of cut	≤0.1DC, ≤1.5DC, DC:Dia.			

Rough milling:

- From the reference tables, the turning cutting conditions are:
- Feed per tooth: f_z = 0,04 (mm/tooth)
- Cutting speed: v_c = 300 (m/min)
- Spindle speed calculation:
- $n = \frac{v_c.1000}{\pi.D_c} = 6200$ (rpm)
- Selected spindle speed n = 6200 (rpm)
- Feed rate: $V_f = n.\ Z_n.\ f_z$ = 744 (mm/min)
- Width of cut / Depth of cut:
- ae = 0,1.D = 0,8 (mm)

Finish milling:

- From the reference tables, the turning cutting conditions are:
- Feed per tooth: f_z = 0,04 (mm/tooth)
- Cutting speed: v_c = 230 (m/min)
- Spindle speed calculation:

- $n = \frac{v_c.1000}{\pi.D_c} = 5000$ (rpm)
- Selected spindle speed n = 7200 (rpm)
- Feed rate: $V_f = n.\ Z_n.\ f_z = 2000.6.0{,}12 = 600$ (mm/min)
- Width of cut / Depth of cut:
- ae = 0,1.D = 0,8 (mm)

4.3.3. Setup 3

❖ **Step 1+2: Drilling and reaming through hole Ø20**

Drilling hole Ø19.5

Clamping diagram:

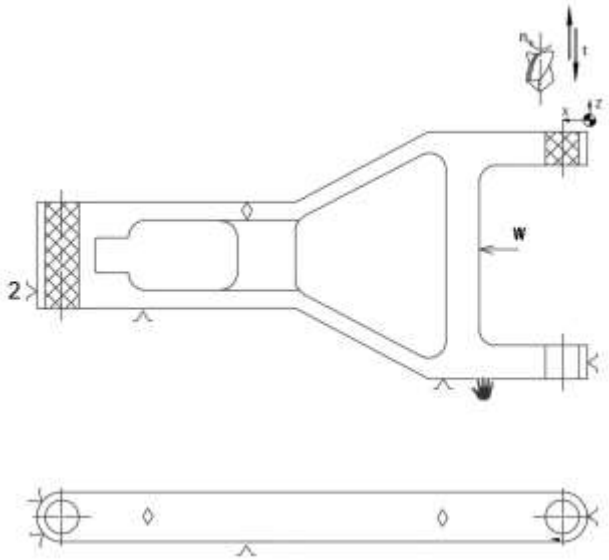

Figure 4-15. Fixturing diagram – setup 3, step 1+2

Cutting tool: Drill bit SD1108A-1950-170-20R1

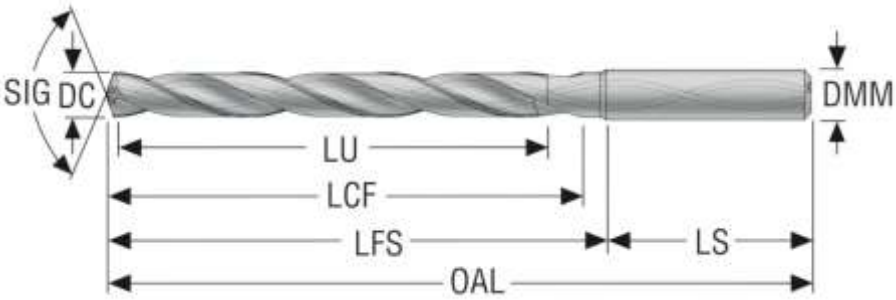

Figure 4-16. Drill bit SD1108A-1950-170-20R1

DC	Cutting diameter	19.500 mm
DMM	Shank diameter	20.00 mm
Gradetype	Gradetype	Carbide PVD
ItemNumber	Item Number	03295083
LCF	Length chip flute	190.0 mm
LFS	Functional length secondary	194.0 mm
LS	Shank length	50.0 mm
LU	Usable length	170.0 mm
OAL	Overall length	244.0 mm

DMS	f										v_c
	Ø3.00 Ø 0.118	Ø4.00 Ø 0.157	Ø6.00 Ø 0.236	Ø8.00 Ø 0.315	Ø10.00 Ø 0.394	Ø12.00 Ø 0.472	Ø14.00 Ø 0.551	Ø16.00 Ø 0.630	Ø18.00 Ø 0.709	Ø20.00 Ø 0.787	
P1	0,12 0.0048	0,14 0.0055	0,18 0.0070	0,22 0.0085	0,25 0.010	0,28 0.011	0,30 0.012	0,32 0.013	0,34 0.013	0,36 0.014	120 395
P2	0,12 0.0048	0,14 0.0055	0,18 0.0070	0,22 0.0085	0,25 0.010	0,28 0.011	0,32 0.013	0,34 0.013	0,36 0.014	0,36 0.014	115 375
P3	0,11 0.0044	0,13 0.0050	0,17 0.0065	0,20 0.0080	0,24 0.0095	0,28 0.011	0,30 0.012	0,32 0.013	0,34 0.013	0,34 0.013	100 330
P4	0,11 0.0044	0,13 0.0050	0,17 0.0065	0,20 0.0080	0,24 0.0095	0,26 0.010	0,28 0.011	0,30 0.012	0,32 0.013	0,34 0.013	85 280
P5	0,11 0.0044	0,13 0.0050	0,16 0.0065	0,20 0.0080	0,24 0.0095	0,26 0.010	0,28 0.011	0,30 0.012	0,32 0.013	0,34 0.013	85 280
P6	0,11 0.0044	0,12 0.0048	0,16 0.0065	0,20 0.0080	0,24 0.0095	0,26 0.010	0,28 0.011	0,30 0.012	0,32 0.013	0,34 0.013	95 310
P7	0,11 0.0044	0,12 0.0048	0,16 0.0065	0,20 0.0080	0,24 0.0095	0,26 0.010	0,28 0.011	0,30 0.012	0,32 0.013	0,34 0.013	90 295
P8	0,11 0.0044	0,13 0.0050	0,17 0.0065	0,20 0.0080	0,24 0.0095	0,28 0.011	0,30 0.012	0,32 0.013	0,34 0.013	0,34 0.013	85 280
P11	0,11 0.0044	0,12 0.0048	0,16 0.0065	0,20 0.0080	0,24 0.0095	0,26 0.010	0,28 0.011	0,30 0.012	0,32 0.013	0,34 0.013	60 195
P12	0,075 0.0030	0,085 0.0034	0,11 0.0044	0,14 0.0055	0,16 0.0065	0,18 0.0070	0,19 0.0075	0,20 0.0080	0,22 0.0085	0,22 0.0085	42 140
M1	0,080 0.0032	0,095 0.0038	0,13 0.0050	0,17 0.0065	0,20 0.0080	0,22 0.0085	0,24 0.0095	0,26 0.010	0,28 0.011	0,30 0.012	60 195
M2	0,070 0.0028	0,085 0.0034	0,12 0.0048	0,15 0.0060	0,18 0.0070	0,20 0.0080	0,22 0.0085	0,24 0.0095	0,25 0.010	0,26 0.010	50 165
M3	0,055 0.0022	0,070 0.0028	0,095 0.0038	0,12 0.0048	0,14 0.0055	0,16 0.0065	0,18 0.0070	0,19 0.0075	0,20 0.0080	0,22 0.0085	38 125
M4	0,050 0.0020	0,060 0.0024	0,085 0.0034	0,11 0.0044	0,12 0.0048	0,14 0.0055	0,15 0.0060	0,17 0.0065	0,18 0.0070	0,19 0.0075	29 95
M5	0,050 0.0020	0,060 0.0024	0,085 0.0034	0,11 0.0044	0,12 0.0048	0,14 0.0055	0,15 0.0060	0,17 0.0065	0,18 0.0070	0,19 0.0075	24 80
K1	0,12 0.0048	0,14 0.0055	0,18 0.0070	0,22 0.0085	0,26 0.010	0,28 0.011	0,30 0.012	0,34 0.013	0,34 0.013	0,36 0.014	75 245
K2	0,11 0.0044	0,13 0.0050	0,16 0.0065	0,20 0.0080	0,24 0.0095	0,26 0.010	0,28 0.011	0,30 0.012	0,32 0.013	0,34 0.013	65 210
K3	0,11 0.0044	0,13 0.0050	0,16 0.0065	0,20 0.0080	0,24 0.0095	0,26 0.010	0,28 0.011	0,30 0.012	0,32 0.013	0,34 0.013	60 190
K4	0,11 0.0044	0,13 0.0050	0,16 0.0065	0,20 0.0080	0,24 0.0095	0,26 0.010	0,28 0.011	0,30 0.012	0,32 0.013	0,34 0.013	50 160
K5	0,10 0.0040	0,11 0.0044	0,15 0.0060	0,18 0.0070	0,20 0.0080	0,24 0.0095	0,25 0.010	0,28 0.011	0,28 0.011	0,30 0.012	31 100
N1	0,15 0.0060	0,17 0.0065	0,22 0.0085	0,25 0.010	0,28 0.011	0,32 0.013	0,34 0.013	0,36 0.014	0,38 0.015	0,40 0.016	205 670
N2	0,15 0.0060	0,17 0.0065	0,22 0.0085	0,25 0.010	0,28 0.011	0,32 0.013	0,34 0.013	0,36 0.014	0,38 0.015	0,40 0.016	135 445
N3	0,15 0.0060	0,17 0.0065	0,22 0.0085	0,25 0.010	0,28 0.011	0,32 0.013	0,34 0.013	0,36 0.014	0,38 0.015	0,40 0.016	90 295
N11	0,15 0.0060	0,17 0.0065	0,22 0.0085	0,25 0.010	0,28 0.011	0,32 0.013	0,34 0.013	0,36 0.014	0,38 0.015	0,40 0.016	165 540

N1	0,15 *0.0060*	0,17 *0.0065*	0,22 *0.0085*	0,25 *0.010*	0,28 *0.011*	0,32 *0.013*	0,34 *0.013*	0,36 *0.014*	0,38 *0.015*	0,40 *0.016*	205 *670*
N2	0,15 *0.0060*	0,17 *0.0065*	0,22 *0.0085*	0,25 *0.010*	0,28 *0.011*	0,32 *0.013*	0,34 *0.013*	0,36 *0.014*	0,38 *0.015*	0,40 *0.016*	135 *445*
N3	0,15 *0.0060*	0,17 *0.0065*	0,22 *0.0085*	0,25 *0.010*	0,28 *0.011*	0,32 *0.013*	0,34 *0.013*	0,36 *0.014*	0,38 *0.015*	0,40 *0.016*	90 *295*
N11	0,15 *0.0060*	0,17 *0.0065*	0,22 *0.0085*	0,25 *0.010*	0,28 *0.011*	0,32 *0.013*	0,34 *0.013*	0,36 *0.014*	0,38 *0.015*	0,40 *0.016*	165 *540*

- From the reference tables, the turning cutting conditions are:
- Feed per tooth: f_z = 0,38 (mm/tooth)
- Cutting speed: v_c = 300 (m/min)
- Spindle speed calculation:
- $n = \frac{v_c.1000}{\pi.D_c} = 4899$ (rpm)
- Selected spindle speed n = 4900 (rpm)
- Feed rate: $V_f = n.\ Z_n.\ f_z = 3800.2.0{,}4 = 3723$ (mm/min)
- Width of cut / Depth of cut:
- ae = D = 19.5 (mm)

Reaming hole Ø20

Cutting tool: Reamer PMX08BHM-14500-20N1

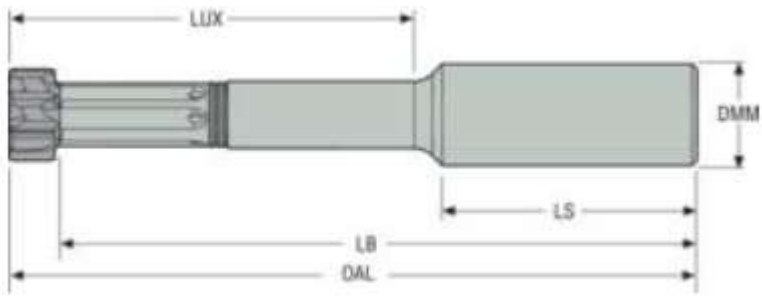

Figure 4-17. Reamer PMX08BHM-14500-20N1

DCN	Cutting diameter minimum	14.5 mm
DCX	Cutting diameter maximum	21.5 mm
DMM	Shank diameter	20.00 mm
ItemNumber	Item Number	03075440
LB	Body length	188.0 mm
LS	Shank length	50.0 mm
LUX	Usable length maximum	145.0 mm
OAL	Overall length	198.0 mm
Weight	Net weight	0.319 kg

SMG		a_p (∅)		f			v_c										
		z=6	z=8 z=10	z=6	z=8	z=10	H15	CP20	RX2000	RK2050	CF	RX1500	RK1550	RN2010	RM2020	RM2090	RS2090
N1	PMX5..6..8-EB45	.004 -.008	.004 -.012	.012 -.035	.016 -.047	.020 -.059	165 (100-330)	–	260 (100-490)	–	–	–	–	165 (100-330)	–	–	–
N2	PMX5..6..8-EB45	.004 -.008	.004 -.012	.012 -.035	.016 -.047	.020 -.059	165 (100-330)	–	260 (100-490)	–	–	–	–	165 (100-330)	–	–	–
N3	PMX5..6..8-EB45	.004 -.008	.004 -.012	.012 -.035	.016 -.047	.020 -.059	165 (100-330)	–	260 (100-490)	–	–	–	–	165 (100-330)	–	–	–
N11	PMX5..6..8-EB45	.004	.004	.012	.016	.020	165	–	260	–	–	–	–	165	–	–	–

- From the reference tables, the turning cutting conditions are:
- Feed per tooth: f_z = 0,12 (mm/tooth)
- Cutting speed: v_c = 165 (m/min)
- Spindle speed calculation:
- $n = \frac{v_c.1000}{\pi.D_c} = 2627$ (rpm)
- Selected spindle speed n = 2700 (rpm)
- Feed rate: $V_f = n.\ Z_n.\ f_z = 1944$ (mm/min)
- Width of cut / Depth of cut:
- ae = D = 20 (mm)

4. 4. Jig design

4.4.1. Building the principle diagram:

The jig is designed for drilling holes, positioned and constrained with 6 degrees of freedom as shown:

- The side surface uses a short V-block to position 2 degrees of freedom.
- The front surface uses a flat-head locating pin to position 1 degree of freedom.
- The bottom surface uses a pressure plate to position 2 degrees of freedom.

The clamping mechanism is a movable V-block to position 1 degree of freedom, translated by a crank handle mechanism

Calculation of cutting force and torque during drilling:

- Cutting force :

$F_c = Pc.\frac{1020.60}{Vc}$ (N)

Where: drilling power Pc = 0.04 (kW)

cutting speed Vc = 122.52 (m/min)

➔ $F_c = 20\ N$

- Torque M_x :

M_x=10xC_MxD^qxS^yxk_p

From reference tables:

C_M=0.0345; q=2; y=0.8

=> M_x=10x0.0345x10^2x$0.5^{0.8}$x1.08=21.4 (N.m)

- Torque during boring operation M_x :

$M_x=\frac{C_p.t^x.S_Z^y.D.Z}{2.100}$

C_p=300;x=1; y=0.75

Feed per tooth $S_z = 0.4$ (mm/tooth), z = 6

=> $M_x=\frac{300.0.5^1.0.4^{0.75}.10.6}{2.100} = 22.63$ (Nm)

4.4.2. Clamping Force Calculation, Clamping Mechanism Selection, and Force Source Determination

- Theoretical clamping force

$$W_{tt} = \frac{K.F_c}{f1 + f2}$$

- Where: K=1,5: General safety factor

F_c=20 N: Cutting force

f1= 0,2: Friction coefficient between part surface and jaw

f2= 0,15: Friction coefficient between machined surface and support pin

- Actual clamping force: $W_{tt} = 85.71\ N$

$W = Wtt.K$

$K = k0.k1.k2.k3.k4.k5.k6$

- With values

$k0$: general safety factor $k0$=1,5÷2

$k1$: allowance for uneven stock (roughing), $k5$=1,2

$k2$: allowance for tool wear, $k5$=1,2

$k3$: intermittent cutting, $k3$=1,2

$k4$: manual clamping, $k4$=1,3;

$k5$: clamping lever angle < 90°, $k5$=1,0

$k6$: positioning on support plates, $k6$=1,5

- Ta có :K=1,5.1,2.1,2.1,2.1,3.1.1,5=5

  ⇨ W=$Wtt.K$=85.71x5=428.55 (N)

4.4.3. Calculation of jig structure tolerance.

- According to the documentation, setup tolerance is calculated as:

$$\varepsilon_{gd} = \sqrt{{\varepsilon_c}^2 + {\varepsilon_k}^2 + \varepsilon_m^2 + \varepsilon_{ld}^2 + \varepsilon_{ct}^2}$$

Where:

ε_k: o clamping error (clamping force is perpendicular to machining direction) $\varepsilon_k = 0$

ε_m= β.$\sqrt{N}$ (μm)

Where:

- β=0.3: coefficient for V-block locating structure
- N=540: number of parts machined

Nên ta có: ε_m= β.$\sqrt{N}$= 0,3.$\sqrt{540}$ = 6.971(μm)

ε_{ld}: Fixture installation error: $\varepsilon_{ld} = 10\mu m$

ε_c: Datum error according to the locating diagram $\varepsilon_c = 25\mu m$

$\varepsilon_{gd} = 50\mu m$

Fixture manufacturing tolerance limit:

$$\varepsilon_{ct} = \sqrt{{\varepsilon_{gd}}^2 - ({\varepsilon_k}^2 + \varepsilon_m^2 + \varepsilon_{ld}^2 + \varepsilon_c^2)} = \sqrt{50^2 - (0 + 6.971^2 + 10^2 + 25^2)}$$
$$= 41.55\ \mu m$$

CHAPTER 5. CNC MACHINING PROGRAMMING OF THE COMPONENT USING CREO 5.0 SOFTWARE

5. 1. Introduction to creo 5.0 software

Creo 5.0 is a 3D CAD software developed by PTC (Parametric Technology Corporation, USA), widely used in mechanical design, engineering simulation, and manufacturing support. It is a successor in the product line that originated from Pro/ENGINEER, a pioneer in parametric 3D modeling for industrial design.

The software enables users to model mechanical components, create assemblies, perform stress and vibration simulations, and generate CNC machining programs—all within the same integrated environment. With a user-friendly interface, powerful modeling capabilities, and automation tools, Creo 5.0 helps reduce design time and enhance product quality.

5.1.1. Key features of creo 5.0

- Parametric 3D Modeling: Creo allows users to create precise 3D models based on dimensional constraints and geometric relationships. Any change in parameters will automatically update the entire model accordingly.
- Assembly Design: Users can build complex assemblies from multiple components, check for fit, alignment, and interference, as well as simulate kinematic motion.
- 2D Drawing Generation: The software can automatically generate detailed 2D engineering drawings from 3D models, complete with dimensions, geometric tolerances, surface finish symbols, and technical annotations.
- Engineering Simulation (CAE): Integrated tools such as Creo Simulate allow users to perform basic finite element analysis (FEA), including stress, strain, displacement, and modal analysis, without leaving the CAD environment.
- Computer-Aided Manufacturing (CAM): Creo provides support for CNC toolpath generation. Users can simulate the machining process, optimize material removal, and export NC code for milling, turning, and drilling operations.
- Advanced Surface Modeling: In addition to solid modeling, Creo offers surface design tools for creating complex freeform surfaces, ideal for components requiring aerodynamic or aesthetic design.
- Additive Manufacturing Support: Creo 5.0 includes tools for preparing parts for 3D printing, such as lattice structure generation, topology optimization, and print orientation analysis.

5.1.2. Advantages of creo 5.0

- High performance and stability when handling large and complex models
- Modern, intuitive user interface suitable for both beginners and experienced users
- Seamless integration between CAD, CAE, and CAM environments
- Excellent compatibility with standard file formats such as STEP, IGES, and SolidWorks

5.1.3. Practical applications

Creo is widely adopted in industries such as:

- Aerospace: Designing aircraft structures, landing gear systems, and mechanical linkages
- Mechanical engineering: Developing industrial machinery, tooling, jigs and fixtures
- Automotive: Modeling engines, suspension systems, and transmission components
- Education and research: Used as a teaching tool in mechanical engineering programs

Startup interface of the software:

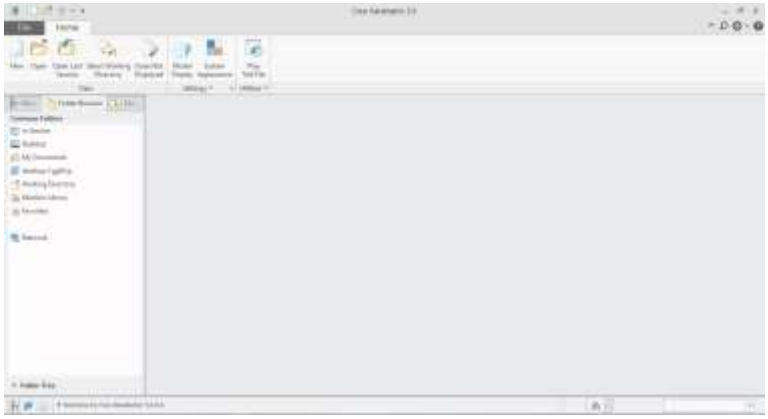

Some working modules:

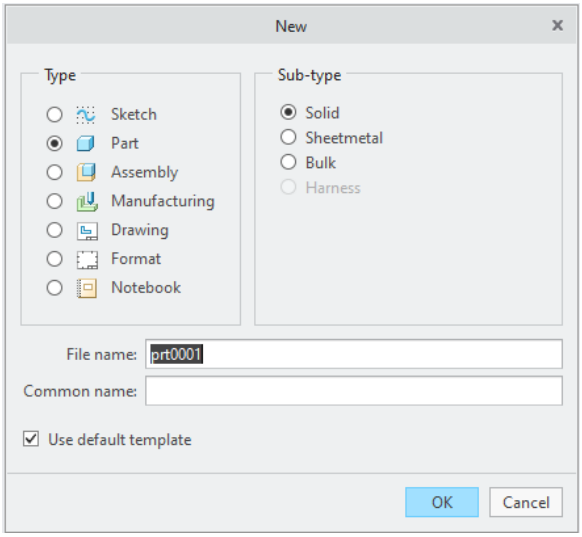

Main working interface:

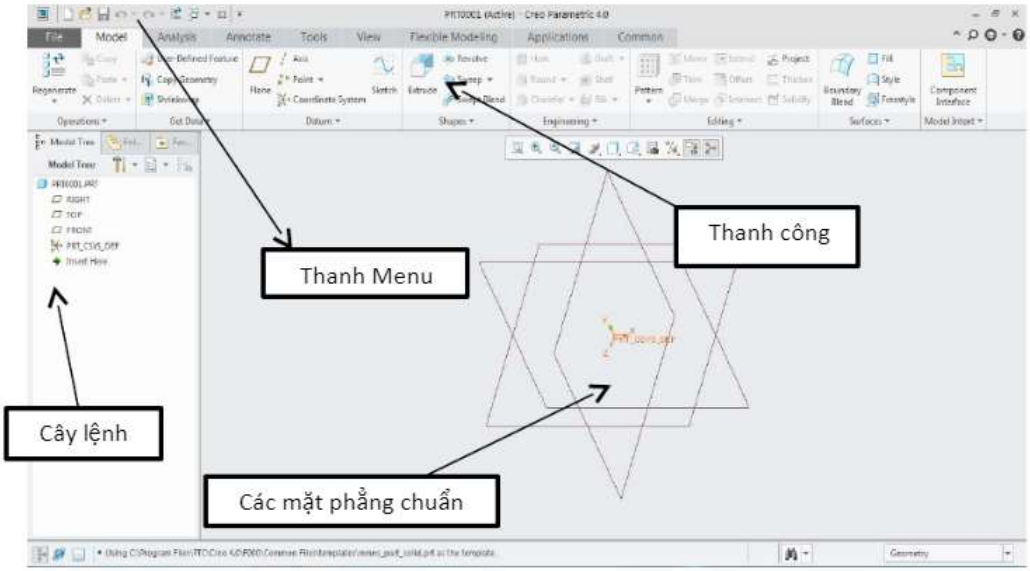

5. 2. CNC programming for the landing gear main shaft

❖ Workpiece (Stock) Simulation:

- Workpiece for machining the landing gear main shaft

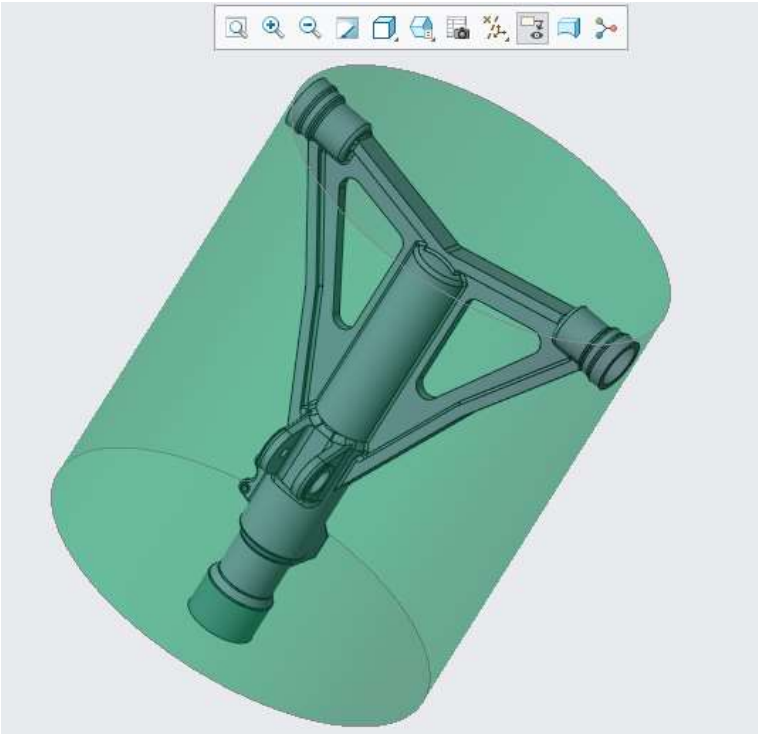

Figure 5-1. Workpiece for machining the landing gear main shaft

- Rough milling of the landing gear main shaft

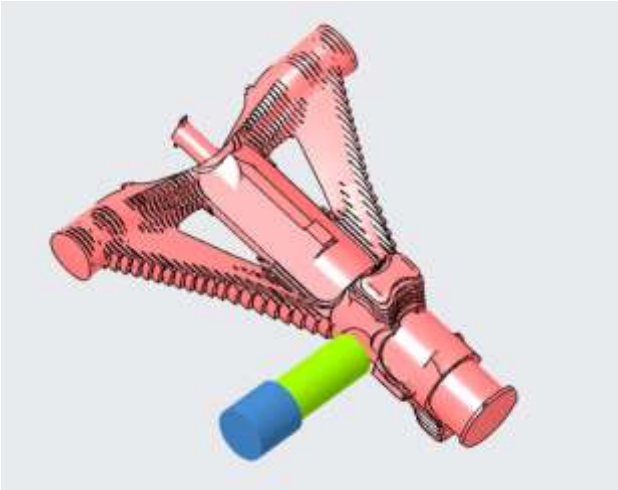

Figure 5-2. Rough milling of the landing gear main shaft

- Rough contour milling of the landing gear main shaft

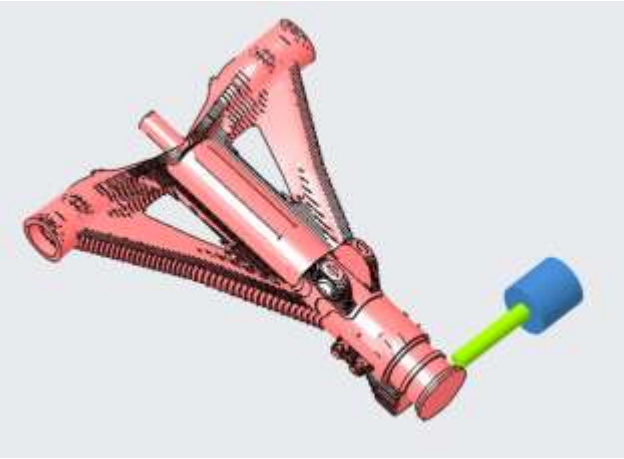

Figure 5-3. Rough contour milling of the landing gear main shaft

- Contour milling of the top surface of the landing gear main shaft

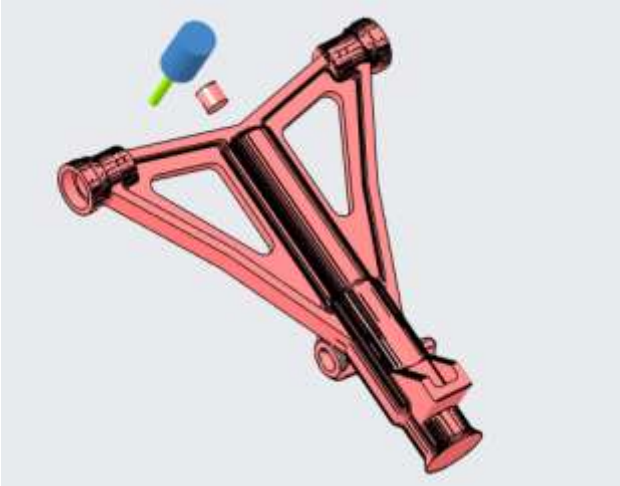

Figure 5-4. Contour milling of the top surface of the landing gear main shaft

- Finish milling of the landing gear main shaft

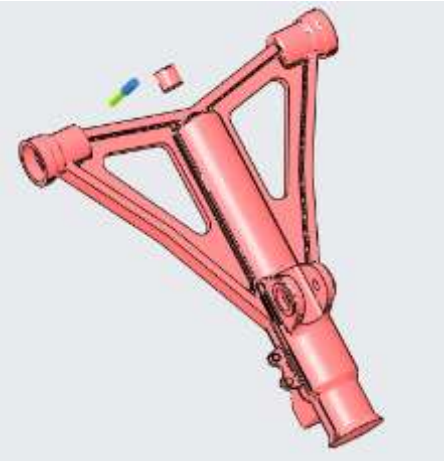

Figure 5-5. Finish milling of the landing gear main shaft

5. 3. CNC programming for the lower torque link

❖ Workpiece (Stock) simulation:

- Workpiece for machining the landing gear main shaft

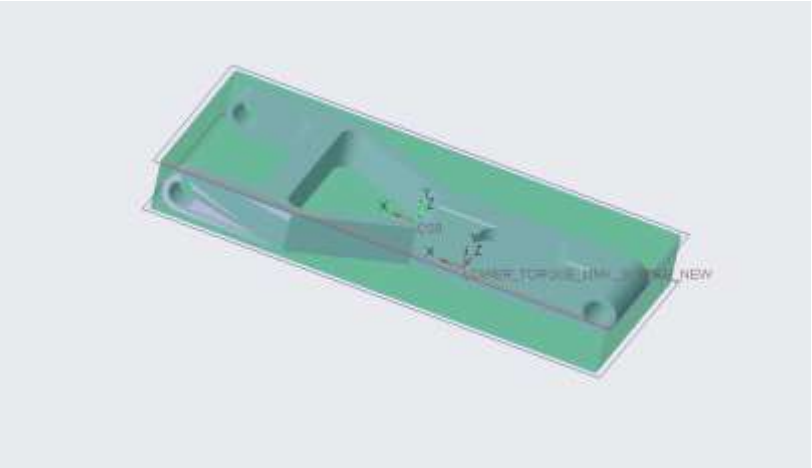

Figure 5-6. Workpiece for machining the lower torque link

- Surface contour milling of part lower torque link

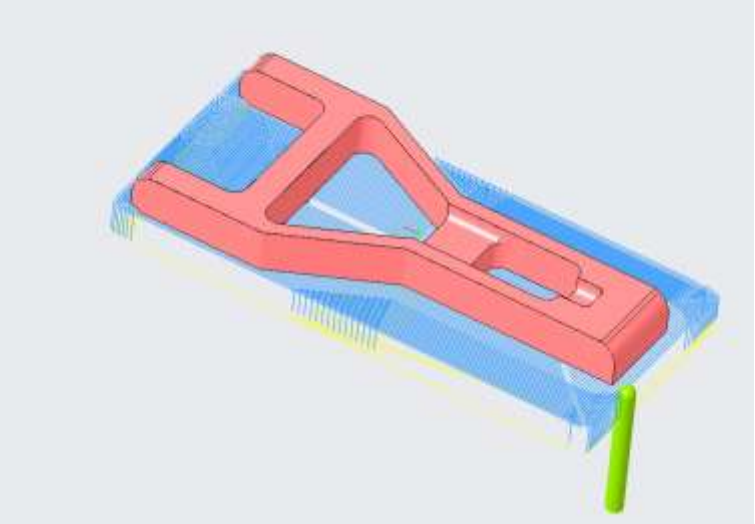

Figure 5-7. Surface contour milling of part lower torque link

- Drilling of part lower torque link

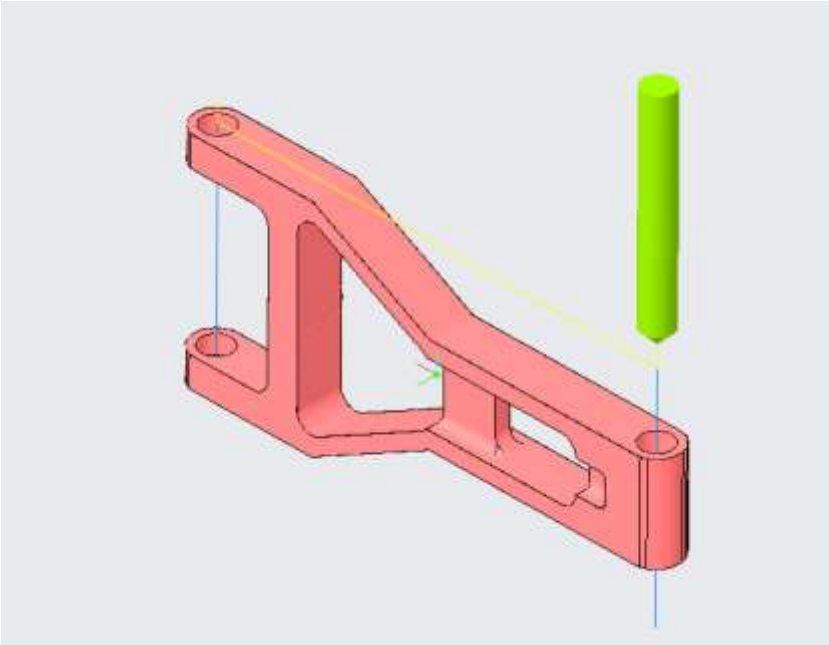

Figure 5-8. Drilling of part lower torque link

CHAPTER 6. DYNAMIC ANALYSIS OF FORCES ACTING ON THE MECHANISM

6. 1. Preliminary Setup of dynamic load diagram on the mechanism

6.1.1. Dynamic analysis

The aircraft landing gear system is simplified into a two-degree-of-freedom damper model as shown below. The aircraft landing process is simplified into a dynamic interaction between two masses under the effect of a damping mechanism. These two masses are the Sprung Mass and the Unsprung Mass.

The Sprung Mass refers to the airframe and the structural mass above the outer cylinder of the shock absorber, while the Unsprung Mass refers to the structure below the piston rod of the shock absorber.

The oleo-pneumatic shock absorber consists of upper and lower chambers separated by orifices and metering pins. The top part of the upper chamber is filled with compressed gas to create a gas spring, and the remaining volumes in the two chambers are filled with oil to provide hydraulic damping.

The contact force from the tire at the axle point of the landing gear is not aligned with the strut axis, increasing the normal force on the bearing region. This allows the half-axle landing gear to fully reflect the effect of frictional loads during touchdown.

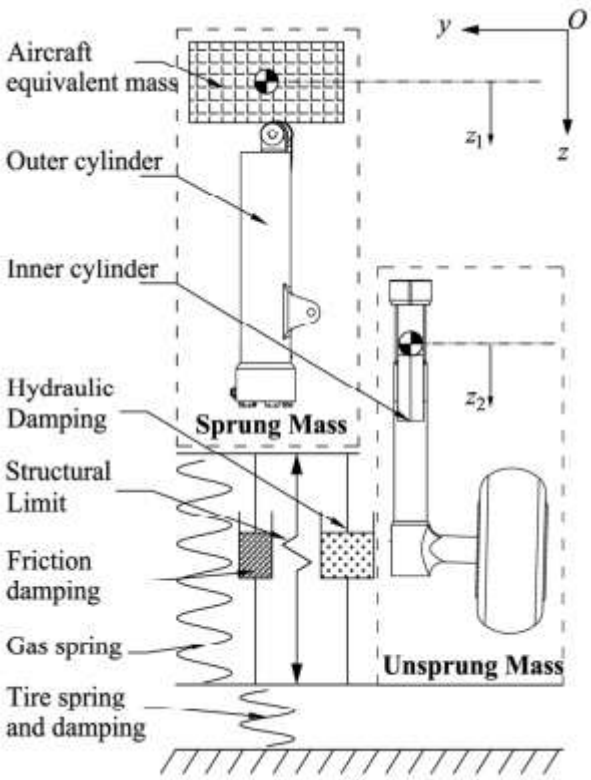

Figure 6-1. Dynamic Model of Aircraft Landing Gear System

According to the above model, the dynamic equilibrium equations of motion for the main landing gear are written as follows:

$$\begin{cases} m_1\ddot{z}_1 = m_1 g - F_a - F_h - F_{f'} \\ m_2\ddot{z}_2 = -F_V + m_2 g + F_a + F_h + F_{f'} \end{cases}$$

Where m_1 và m_2 denote the Sprung and Unsprung Masses, respectively z_1 và z_2 epresent the vertical displacements of the Sprung and Unsprung Masses

- F_a: pneumatic spring force
- F_h: hydraulic damping force
- F_f: frictional force in the damper
- F_V: vertical ground reaction force on the tire
- The pneumatic spring force, which depends on the initial gas volume, is given by:

$$F_a = A_a \left[P_0 \left(\frac{V_0}{V_0 - A_a S} \right)^{\gamma} - P_{atm} \right]$$

Where:

- A_a: gas compression area
- P_0 : initial gas pressure
- V_0 : initial gas volume
- S : stroke of the damper
- γ : polytropic index of the gas
- P_{atm}: atmospheric pressure.

The hydraulic damping force is proportional to the square of the relative velocity and parameters of the orifice, expressed as:

$$F_h = \rho \frac{A_h^3}{2C_d^2 A_d^2} \dot{s}|\dot{s}|$$

Where:

- ρ : fluid density
- A_h: hydraulic area
- A_d: orifice area
- C_d : discharge coefficient
- $\dot{S}$: relative sliding velocitya hành trình.

Frictional forces within the damper consist of dry (Coulomb) friction and viscous friction. The dry friction arises from the reaction forces acting on the upper and lower bearing surfaces. The viscous friction results from internal fluid shear within the damper and is dependent on the internal gas pressure.

$$F_f = F_{nf} + F_{sf}$$

Where:

- F_{nf} : dry (Coulomb) friction
- F_{sf} : viscous friction, expressed as

The viscous friction force depends on the gas pressure and is given by

$$F_{sf} = -\mu_{sf} F_a sgn(\dot{s})$$

Where:

- μ_{sf}: viscous friction coefficient
- Sgn: signum function.

Shaft friction is the product of the friction coefficient and the acting force. Due to the poor lubricating properties of hydraulic oil and the geometry of the bearing surface, it is assumed that dry friction conditions exist in the shock absorber. Coulomb's law is the most commonly used dry friction model as it requires only a dynamic friction coefficient. The Stribeck effect model describes how friction decreases with increasing relative velocity from rest:

$$\begin{cases} F_{nf} = \left(F_C + (F_S - F_C)e^{-\frac{|v|}{v_s}\delta}\right) sgn(v) + \sigma v \\ F_S = \mu_s N, F_C = \mu_k N \end{cases}$$

- F_S: static friction force
- F_C: Coulomb friction force
- μ_s, μ_k: static and kinetic friction coefficients respectively
- v: relative velocity
- v_s: Stribeck velocity
- δ: exponential constant (typically 2)
- σ: viscous friction coefficient (ignored in this work)

The vertical force F_V from the ground results from tire compression upon touchdown. A semi-empirical calculation model is described as

$$F_V = (1 + C_T \dot{z}_2) f(z_2)$$

Where:

- C_T : vertical damping coefficient of the tire
- f(z_2): static vertical force of the tire corresponding to the compression amount.

The ground traction force is the frictional load due to relative rotation between the landing gear tire and the ground, related to F_V and the ground friction coefficient

$$F_D = \mu_w F_V$$

Where: $\mu_w$is ground friction coefficient, ranging from 0.4 to 0.9 depending on wheel angular speed, contact pressure, and surface conditions

6.1.2. Analysis of forces acting on the mechanism

The forces acting from the ground on the shock absorber include the vertical force at the bearing area between the outer cylinder and the piston rod, along with the elastic deformation of the shock absorber. Additional bending moments are generated at the bearing areas to ensure uniform deformation of the outer cylinder and piston rod in the supported region. These are represented by the reaction forces on the upper and lower bearing surfaces, increasing the total vertical force in the bearing area. Figure 3 shows the internal force analysis diagram for the half-axle main landing gear in the xoz and yoz planes under the action of vertical and longitudinal forces from the ground.

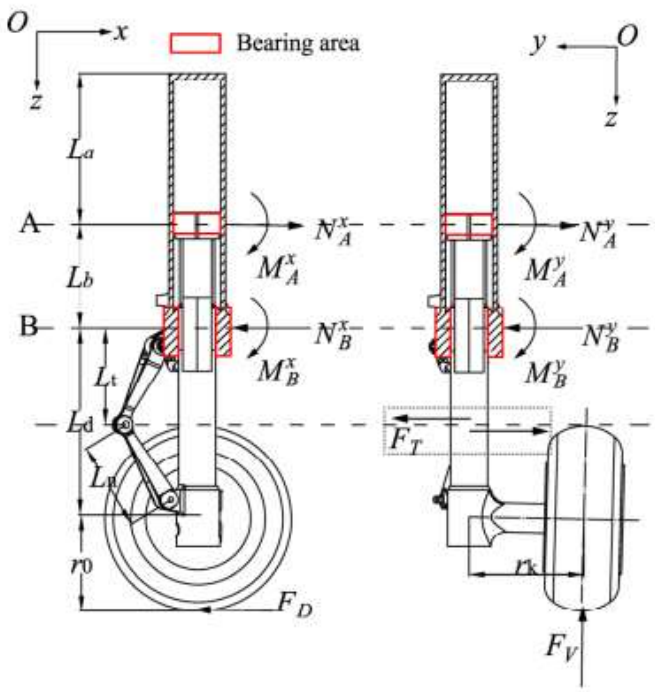

Figure 6-2. Load and Moment Analysis Diagram of Aircraft Landing Gear

N and M in Figure 3 represent the vertical forces and additional bending moments; subscripts “A” and “B” indicate points A and B of application, while superscripts “x” and “y” refer to the xoz and yoz planes, respectively. F_T is the internal force acts at the intersection point of the upper and lower moment links.

To simplify calculations, the following assumptions are made for the landing gear shock absorber in this work. The outer cylinder is simplified as a fixed-end beam model, and the piston rod is simplified as a cantilever beam model. Elastic deformations of the outer cylinder and piston rod are considered under small deformation assumptions, using equivalent area moment of inertia for the simplified uniform beam model in the calculations.

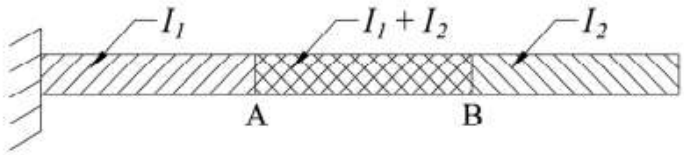

Figure 6-3. Moment of Inertia Distribution in the Bearing Region of the Landing Gear Cylinder

I_1 and I_2 in Figure 4 represent the equivalent area moments of inertia of the outer cylinder and the piston rod, respectively. In the xoz and yoz planes, the outer cylinder and the piston rod are subjected to external forces and internal forces at the bearing regions. The deflection and rotation angles of the outer cylinder and piston rod at the upper and lower bearing locations can be calculated using external and internal contact forcesThe deflection and rotation angles on the outer cylinder are denoted as W_A, W_B, θ_A và θ_B. The deflection and rotation angles on the piston rod are denoted as W'_A, W'_B, θ'_A and θ'_B, respectively. According to the compatibility conditions of deformation

$$W_A = W'_A, W_B = W'_B, \theta_A = \theta'_A, \theta_B = \theta'_B$$

The calculation results of the four equations for the vertical forces and bending moments at points A and B in the xoz and yoz planes can be described as follows

$$\begin{cases} N_A^x = -\dfrac{F_D I_2}{I_1 + I_2}, M_A^x = \dfrac{L_d F_D I_2 + L_b F_D I_2}{I_1 + I_2}, \\ N_B^x = \dfrac{F_D I_1}{I_1 + I_2}, M_B^x = \dfrac{L_d F_D I_1}{I_1 + I_2}, \\ N_A^y = \dfrac{F_T I_2}{I_1 + I_2}, M_A^y = -\dfrac{L_b F_T I_2 - F_V r_k I_2 + F_T L_t I_2}{I_1 + I_2}, \\ N_B^y = \dfrac{F_T I_2}{I_1 + I_2}, M_B^y = \dfrac{F_V r_k I_1 + F_T I_2 L_t}{I_1 + I_2} \end{cases}$$

The vertical forces and bending moments result from the reaction forces on the upper and lower surfaces of the bearings.

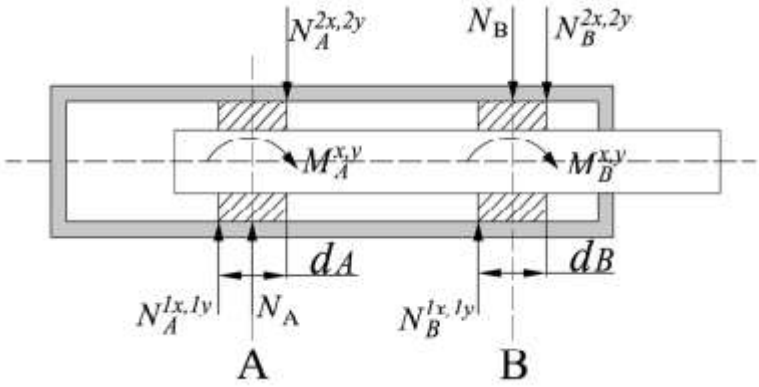

Figure 6-4. Contact Load Model for the Inner–Outer Cylinder Sliding Interface

The reaction forces on the upper and lower surfaces of the bearings can be calculated using the following equations

$$\begin{cases} N_A^{1x,1y} - N_A^{2x,2y} = N_A^{x,y}, \\ \left(N_A^{1x,1y} + N_A^{2x,2y}\right)\dfrac{d_A}{2} = M_A^{x,y}, \\ N_B^{1x,1y} - N_B^{2x,2y} = N_B^{x,y}, \\ \left(N_B^{1x,1y} + N_B^{2x,2y}\right)\dfrac{d_B}{2} = M_B^{x,y} \end{cases}$$

Where: d_A và d_B denote the widths of the upper and lower bearings, respectively. Superscripts "1" and "2" indicate the upper and lower surfaces of each bearing. The resultant reaction forces on each surface of the bearing can be expressed as

$$\begin{cases} N_A^1 = \sqrt{(N_A^{1x})^2 + \left(N_A^{1y}\right)^2}, \\ N_A^2 = \sqrt{(N_A^{2x})^2 + \left(N_A^{2y}\right)^2}, \\ N_B^1 = \sqrt{(N_B^{1x})^2 + \left(N_B^{1y}\right)^2}, \\ N_B^2 = \sqrt{(N_B^{2x})^2 + \left(N_B^{2y}\right)^2}, \end{cases}$$

Therefore, the total vertical force in the contact region between the outer cylinder and the piston rod is:

$$N = |N_A^1| + |N_A^2| + |N_B^1| + |N_B^2|$$

Where N represents the total vertical force in the contact region between the outer cylinder and the piston rod, which is used to calculate the friction force in the shock absorber

Parameters	Definition	Value	Unit
Bộ giảm chấn			
γ	Polytropic index of the gas	1.3	-
C_d	Discharge coefficient of hydraulic damper	0.8	-
ρ	Density of hydraulic fluid	860	kg m^{-3}
P_0	Initial gas pressure	0.85	MPa
V_0	Initial gas volume	129.5 x 10^{-6}	m^3
μ_{se}	Coefficient of friction	0.06	-
Structure			
L_b	Distance between two bearings	0.106	m
L_d	Distance from lower bearing to wheel axle	0.168	m
L_t	Distance from lower bearing to midpoint between two bearings	0.088	m
L_n	Length of Lower Torsion Arm	0.083	m
r_0	Radius of landing gear wheel	0.098	m
r_k	Distance between two landing gear wheel centers	0.1	m
I_w	Moment of inertia of landing gear wheel	5.94 x 10^{-3}	kg m^2
d_A	Diameter of upper bearing	0.02	m
d_B	Diameter of lower bearing	0.04	m
I_1	Equivalent moment of inertia of outer damper cylinder	2.3 x 10^{-7}	m^4
I_2	Equivalent moment of inertia of damper piston	5.1 x 10^{-8}	m^4

CHAPTER 7. ASSEMBLY PROCESS OF MAIN COMPONENTS IN AIRCRAFT LANDING GEAR

7. 1. Main assembly units

7.1.1. Shock strut – piston assembly

The shock strut-piston assembly in the aircraft landing gear (also known as the landing gear shock strut-piston assembly) is a critical component that absorbs shocks during aircraft landing.

This assembly consists mainly of two parts: the shock strut (shock absorber tube) and the piston (shock piston), working together to reduce the impact forces during landing, while maintaining stability and protecting aircraft components from damage.

❖ Structure and operating principle:

- Shock Strut: This is the main body of the assembly, typically made of high-strength aluminum alloy or steel, containing fluid (usually hydraulic oil or compressed air). The shock strut's function is to absorb and mitigate strong impact forces exerted on the aircraft during landing. The fluid inside helps absorb and dissipate shock energy, reducing vibrations and jolts.
- Piston: The piston moves within the shock strut tube when the aircraft lands. It travels through the fluid inside the tube, creating the necessary resistance to dampen shocks, thus minimizing the transmission of impact forces to the aircraft. The piston is designed to move smoothly with sufficient friction to provide effective damping.

❖ Operation process:

- Upon landing, ground contact forces transfer to the landing gear, compressing the shock strut.
- The piston moves inside the shock strut, pushing the fluid, generating resistance to absorb and disperse impact energy.
- This process reduces harsh vibrations, ensuring the aircraft remains stable and its components are protected from landing stresses.

7.1.2. Upper – lower torque link

❖ The torque link assembly typically includes the following main parts:

- Torque link: A robust metal bar, usually aluminum alloy or steel, designed to connect parts of the landing gear system. It transmits forces and torque from the wheel or other landing gear components to the aircraft's control system.

- Pin: Pins are used to connect the torque link to other landing gear components, such as shock struts or other parts, and are generally removable for maintenance or replacement.
- Seal: Rubber or metal seals prevent ingress of dust, water, or foreign substances into the torque link assembly, protecting it and prolonging its durability.
- Locking pins: These safety pins prevent unintended displacement of components during operation.
- Operating principle: The torque link functions by distributing and adjusting the torque forces the landing gear endures during landing and takeoff.
- During landing or takeoff, forces impact landing gear parts, especially wheels and shock struts.
- The torque link maintains landing gear stability by limiting unwanted rotation or movement of components, transmitting torque and evenly distributing loads to prevent deformation or damage.
- It also helps control the landing gear's movement direction, ensuring stability during touchdown or when the aircraft changes ground direction.

7.1.3. Wheel assembly

❖ The wheel assembly operates as follows:

- Landing and takeoff: When landing, the wheel contacts the ground, absorbing impact forces. The tire cushions the impact and distributes forces on the wheel. Braking systems (if any) help stop the aircraft upon touchdown.
- Ground movement: During taxiing, the wheel rotates to enable movement and maintain stability. Bearings facilitate smooth rotation with minimal resistance.
- Load distribution and friction reduction: Components such as bearings and axles reduce friction and evenly distribute loads, increasing wheel system durability and improving performance.

❖ The wheel assembly plays a vital role in aircraft operation:

- Safe ground contact: The wheel is the only part contacting the ground during takeoff and landing, ensuring safe and efficient movement.
- Shock absorption: Tires and other parts absorb and reduce shocks on landing, protecting aircraft structure.
- Brake support: Integrates with braking systems to decelerate and stop the aircraft as needed.
- Stability during ground movement: Bearings and axles minimize friction and enable smooth rotation, promoting stable taxiing.

7. 2. Fastening components

7.2.1. Bolts – Nuts

❖ Bolts are mechanical fasteners with a relatively simple structure consisting of:

A cylindrical shaft with external threads.

A bolt head in various shapes such as hexagonal, octagonal, square, or round, chosen based on application needs.

Nuts mate with bolts via internal threads corresponding to the bolt and come in different shapes and sizes. The most common is the hexagonal nut.

Common materials for bolts and nuts include carbon steel, stainless steel, aluminum, and titanium.

Bolted joints can withstand tensile, bending, shear loads, wear, and provide long-term stability with ease of assembly/disassembly and adjustment without requiring complex technology.

Due to their versatility, bolts and nuts are widely used in all sectors including transportation infrastructure, civil and industrial construction, mechanical manufacturing, and assembly.

7.2.2. Washer

Washers serve as intermediaries between nuts and joining parts in bolted or screwed joints, preventing surface damage during tightening and distributing the nut's compressive force evenly for tighter joints.

Washers vary by function and shape, with two main types:

Plain washer: Flat, closed circular shape.

Tên Sản Phẩm	Đường Kính Trong (d1)		Đường Kính Ngoài (d2)		Độ Dày (s)	
	Max	Min	Max	Min	Max	Min
Long Đền Phẳng 6	6.62	6.4	12	11.57	1.5	1.0
Long Đền Phẳng 8	8.62	8.4	16	15.57	1.5	1.0
Long Đền Phẳng 10	10.77	10.5	20	19.48	2.0	1.0
Long Đền Phẳng 12	13.27	13	24	23.48	2.0	1.0
Long Đền Phẳng 14	15.27	15	28	27.48	2.0	1.5
Long Đền Phẳng 16	17.27	17	30	29.48	2.0	1.5
Long Đền Phẳng 18	19.33	19	34	33.38	4.0	2.0
Long Đền Phẳng 20	21.33	21	37	36.38	4.0	2.0
Long Đền Phẳng 22	23.33	23	39	38.38	4.0	2.0
Long Đền Phẳng 24	25.33	25	44	43.38	4.0	2.0
Long Đền Phẳng 27	28.33	28	50	49.38	4.0	2.0
Long Đền Phẳng 30	31.39	31	56	55.26	4.0	2.0

Figure 7-1. Flat washer

Spring washer: Circular (helical) shape with ends that overlap but do not close like plain washers.

Tên Sản Phẩm	Đường Kính Trong (d)		n (Min)	h (Min)	dc (Max)	H
	Max	Min				
Long Đền Vênh 6	6.62	6.4	2.7	1.5	12.2	≈ 2h
Long Đền Vênh 8	8.62	8.4	3.2	2	15.4	
Long Đền Vênh 10	10.77	10.5	3.7	2.5	18.4	
Long Đền Vênh 12	13.27	13	4.2	3	21.5	
Long Đền Vênh 14	15.27	15	4.7	3.5	24.5	
Long Đền Vênh 16	17.27	17	5.2	4	28	
Long Đền Vênh 18	19.33	19	5.7	4.6	31	
Long Đền Vênh 20	21.33	21	6.1	5.1	33.8	
Long Đền Vênh 22	23.33	23	6.8	5.6	37.7	
Long Đền Vênh 24	25.33	25	7.1	5.9	40.3	
Long Đền Vênh 27	28.33	28	7.9	6.8	45.3	
Long Đền Vênh 30	31.39	31	8.7	7.5	49.9	

Figure 7-2. Split lock washer

7.2.3. Bushing (Linear Bushing)

Bushings, also called linear bearings, support and guide linear motion. They consist of a cylindrical outer shell mounted on a support structure and an inner shaft attached to the moving part. The inner race is typically made from wear-resistant materials like hard plastic, steel, or ceramic, with rolling elements to reduce friction and enable smooth movement.

Bushings allow linear movement between mechanical parts and are often made from wear-resistant materials such as steel, stainless steel, or bronze, sometimes with surface treatments to reduce friction. Some linear bushings are made from plastics or composites.

Key parameters when selecting linear bushings include:

- Load capacity (maximum dynamic or static load).
- Friction (lower is better for smoother, precise movement).
- Accuracy (position and orientation stability).
- Wear resistance (especially for high-speed or heavy-load applications).
- Operating temperature range.
- Compatibility with other components (rails, sliders).

7.2.4. Seals

7.2.4.a. Seal

A seal creates a tight gap between moving parts in mechanical or hydraulic systems to prevent fluid or gas leakage and protect components from contaminants like dust, water, or oil.

❖ Common seal types:

- Static Seal: Used where parts do not move relative to each other, e.g., engine casings or covers.
- Dynamic Seal: Used where parts move relative to each other, e.g., between pistons and shock strut tubes or landing gear.
- O-ring: The most common circular seal made of elastic materials like rubber or elastomers, used to prevent fluid/gas leakage at joints.
- Seal materials include rubber (elasticity, heat resistance), PTFE (high temperature, chemical resistance), and metal (high durability applications).

7.2.4.b. Shaft seal / Lip seal

Lip seals prevent fluid or gas leakage along rotating shafts, using one or more lips that contact the shaft to form a seal.

❖ Types:

- Single lip seal: One lip in contact; simple and common for moderate sealing needs.
- Double lip seal: Two lips for better sealing and protection from fluids and dust.
- Spring-loaded seal: Contains a spring to maintain lip contact for superior sealing under harsh conditions.
- Materials: rubber (standard use), PTFE (high temp/chemical), metal (high mechanical load or temperature).

7.2.4.c. Piston ring

Piston rings are specialized seals in engines or systems requiring prevention of gas or fluid leaks between moving parts, e.g., piston-cylinder interface.

❖ Functions:

- Prevent combustion or compressed gas leakage, maintaining engine efficiency.
- Seal piston to cylinder to prevent oil/fluid leaks.
- Aid heat dissipation from piston to surroundings.

- Materials include alloy steel (high temp and wear resistance), aluminum alloys (lightweight applications), PTFE or synthetic compounds (high temperature and chemical resistance).

7. 3. General requirements in assembly process

Before assembly, inspect tools and fixtures for damage or wear that could harm components. The assembly area, tools, and fixtures must be clean and dry.

Inspect parts for dents, scores, scratches, or corrosion on functional or sealing surfaces. Ensure surfaces are clean and free from solvents or contaminants.

Ensure corrosion protection layers like plating, primers, or coatings are intact and in good condition.

Check chamfers where seals and gaskets pass through to avoid damage during installation.

7. 4. Fixtures used in assembly process

7.4.1. Fixture structure

The fixture frame is made from C45 steel due to its high hardness and strength after heat treatment, ensuring resistance to impact and wear during use. Its high strength supports good load-bearing capacity to securely hold parts during manufacturing. Heat treatment improves dimensional stability, maintaining accuracy over time.

Fixture frame dimensions (DxWxH): 1000 x 900 x 630 mm.

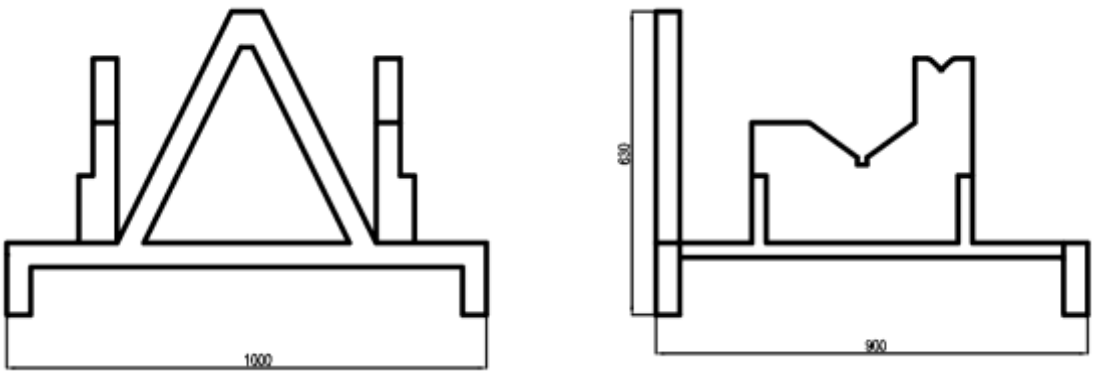

Figure 7-3. Fixture structure

7.4.2. Part positioning fixture

7.4.2.a. Positioning

For assembly, the piston shaft must be fixed using a V-block fixture to constrain 4 degrees of freedom.

A pin prevents rotation around the OX axis.

Additional positioning rods restrict translation along the OX axis to ensure part positioning and balance before clamping.

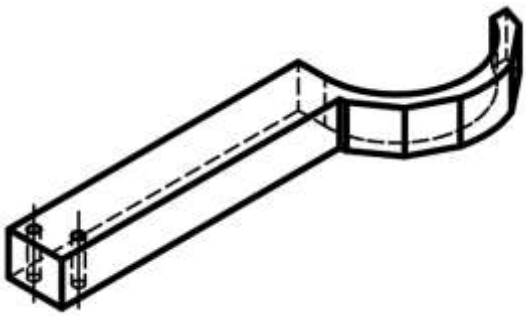

Figure 7-4. Locating bar

7.4.2.b. Clamping

After positioning the part, clamping is performed using a V-block mechanism.

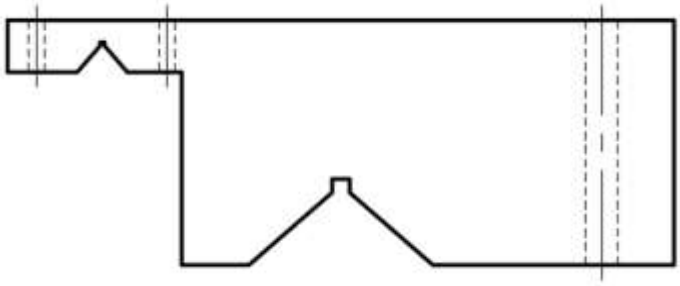

Figure 7-5. V-block with clamp

Hex socket head cap screws are used for tightening due to their ease of assembly/disassembly, high strength, load-bearing capacity, and high torque capability. Their hexagonal design ensures a secure connection, minimizing the risk of loosening during assembly.

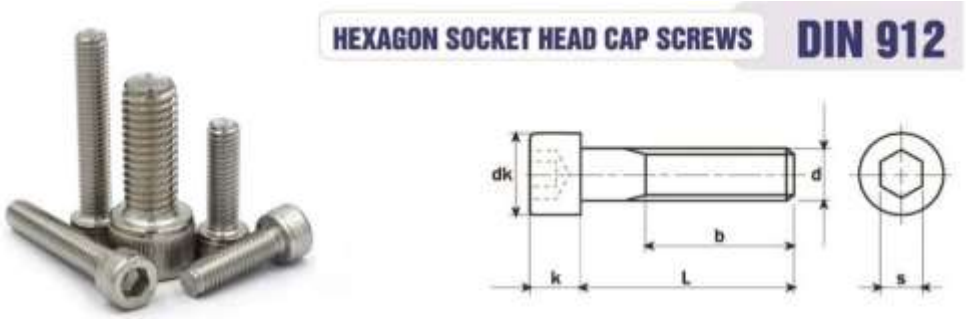

BULÔNG LỤC GIÁC CHÌM ĐẦU TRỤ: DIN 912

Grades/Cấp bền: 8.8/ 10.9/ 12.9/ A2/ A4

d	M3	M4	M5	M6	M8	M10	M12	M14	M16	M18	M20	M22	M24	M27	M30
P	0,5	0,7	0,8	1	1,25	1,5	1,75	2	2	2,5	2,5	2,5	3	3	3,5
b*	18	20	22	24	28	32	36	40	44	48	52	56	60	66	72
dk (max)	5,5	7	8,5	10	13	16	18	21	24	27	30	33	36	40	45
k (max)	3	4	5	6	8	10	12	14	16	18	20	22	24	27	30
s	2,5	3	4	5	6	8	10	12	14	14	17	17	19	19	22

Figure 7-6. Socket head cap screw

7. 5. Assembly procedure

7.5.1. Piston assembly

NOTE: The following procedures detail the piston assembly. Before assembly, ensure that all seals, backup rings, packings, and associated components are lubricated with MIL-H-5606 or MIL-H-6083 hydraulic fluid.

(1) Install the packing and backup ring onto the metering pin. The backup ring should be positioned closest to the retaining pin.

(2) Assemble the metering pin with the retaining pin, packing, and nut.

(3) Install the cotter pin.

(4) Install the packing into the piston plug assembly.

(5) Apply MIL-PRF-23827 grease to the internal surfaces of the piston assembly and piston plug assembly. Slide the piston plug assembly into position.

(6) Fill the cavity between the piston assembly and the piston plug with MIL-PRF-81322 grease.

WARNING: USE PERSONAL PROTECTIVE EQUIPMENT WHEN HANDLING CORROSION INHIBITOR COMPOUNDS SUCH AS MASTINOX 6856K. SKIN CONTACT MAY POSE HEALTH HAZARDS.

(7) Coat the brake torque pin OD with corrosion inhibitor compound (Mastinox 6856K). Align the holes in the piston assembly and piston plug, then insert the brake torque pin.

(8) Secure the torque pin with a washer and locking pin.

(9) Clean the brake torque pin/piston assembly area and apply MIL-A-46146 adhesive around the pin.

(10) Lubricate exposed torque pins with MIL-PRF-81322 grease.

(11) Clean the piston assembly/piston plug area and apply MIL-A-46146 adhesive around it.

WARNING: USE PERSONAL PROTECTIVE EQUIPMENT WHEN HANDLING CORROSION INHIBITOR COMPOUNDS SUCH AS MASTINOX 6856K. SKIN CONTACT MAY POSE HEALTH HAZARDS.

(12) Lightly coat the threads of the gland nut and cylinder with mastinox 6856K corrosion inhibitor.

NOTE: Cylinders marked with a yellow stripe and “S2198” must use oversized gland nuts.

(13) Install seal installation tool AT24882 into the upper bearing retainer groove of the piston assembly. Slide the gland nut and scraper rod into the piston assembly. Align the gland nut groove side with the scraper rod concave face.

(14) Install seal, packing, and backup ring into the groove on the lower bearing.

(15) Slide the outer sleeve and lower bearing into the piston assembly. The lower bearing seal groove and the shoulder end of the outer sleeve should face the shaft.

(16) Remove seal installation tool AT24882 from the piston assembly. Install retaining ring, upper bearing, packing, and rebound ring.

(17) Assemble orifice plate, washer, and piston head into the orifice tube using assembly tools AT24442-1 and AT24442-2.

(18) Install bolt, washer, and nut.

(19) Install locking pin.

(20) Install piston ring, packing, and backup ring into the orifice tube/piston head assembly.

(21) Slide the orifice tube/piston head assembly into the piston and align the retaining hole with the drain valve hole in the outer cylinder assembly.

(22) Slide the piston assembly into the outer cylinder until the retaining hole aligns with the drain valve hole. Install O-ring and drain valve.

(23) Hand-tighten the gland nut into the outer cylinder. Extend and retract the piston assembly to ensure free movement.

(24) Use torque wrench AT24437 to tighten the gland nut.

NOTE: Ensure the gland nut groove aligns with the retaining pin. The pin can be installed with any face toward the outer cylinder assembly.

(25) Install lock plate with nut and two washers.

(26) Install locking pin.

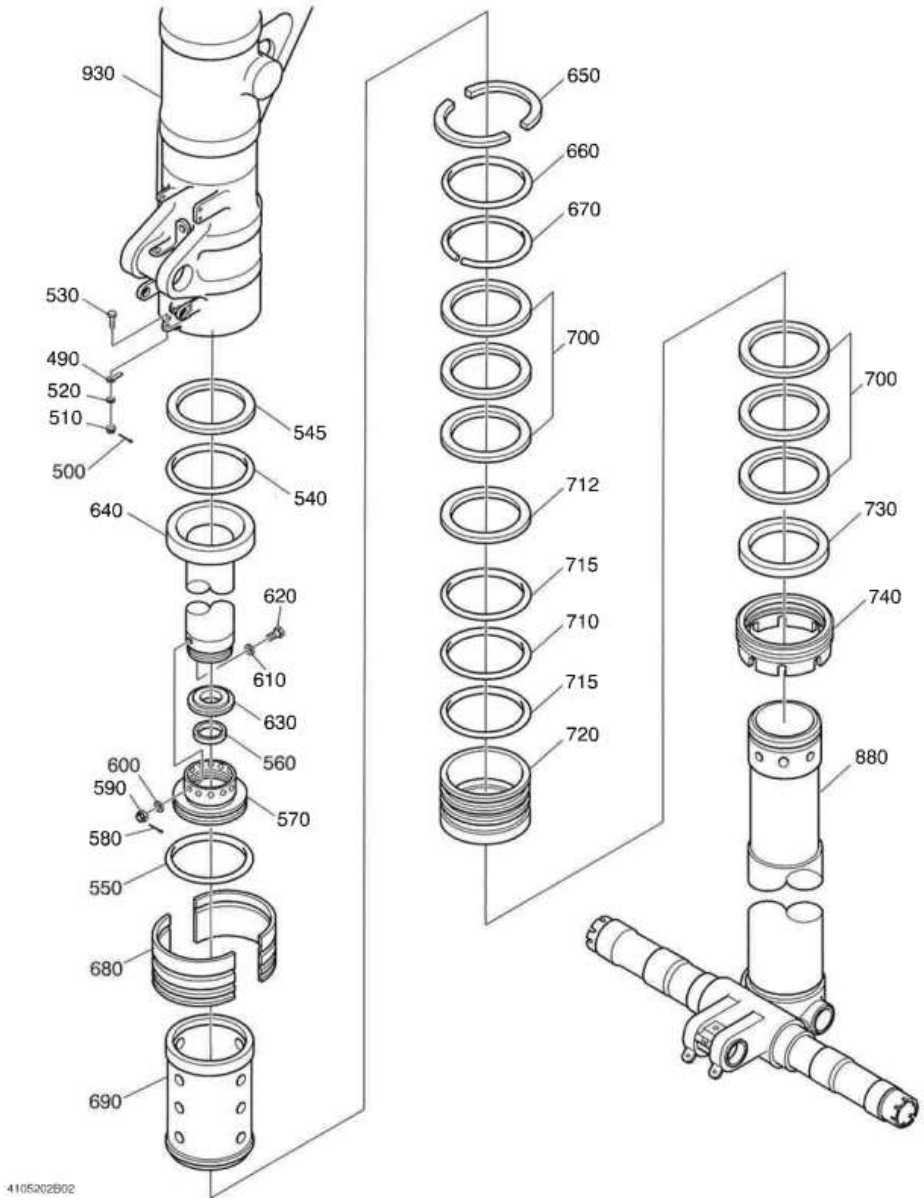

Figure 7-7. Xylanh-piston assembly

7.5.2. Torque link assembly

(1) Position the lower torque link assembly onto the lugs on the piston assembly. Install the lower torque link pin and lower torque link plug.

NOTE: In the following step, lubricate both the shank and thread, as well as the bearing face with MIL-PRF-23827 grease.

(2) Secure the lower torque link pin with a nut, two washers, and bolt.

(3) Install locking pin.

(4) Position the upper torque link assembly onto the lugs on the outer cylinder assembly. Install the upper torque link pin and upper torque link plug.

(5) Secure the upper torque link pin with a nut, two washers, and bolt.

(6) Install locking pin.

(7) Apply MIL-S-8802 Type II sealing compound to all nuts and bolt heads.

(8) Temporarily connect the torque links together at the top using the upper torque link pin, spacer, sleeve bearings, washer, sleeve bearings, washer, and nut.

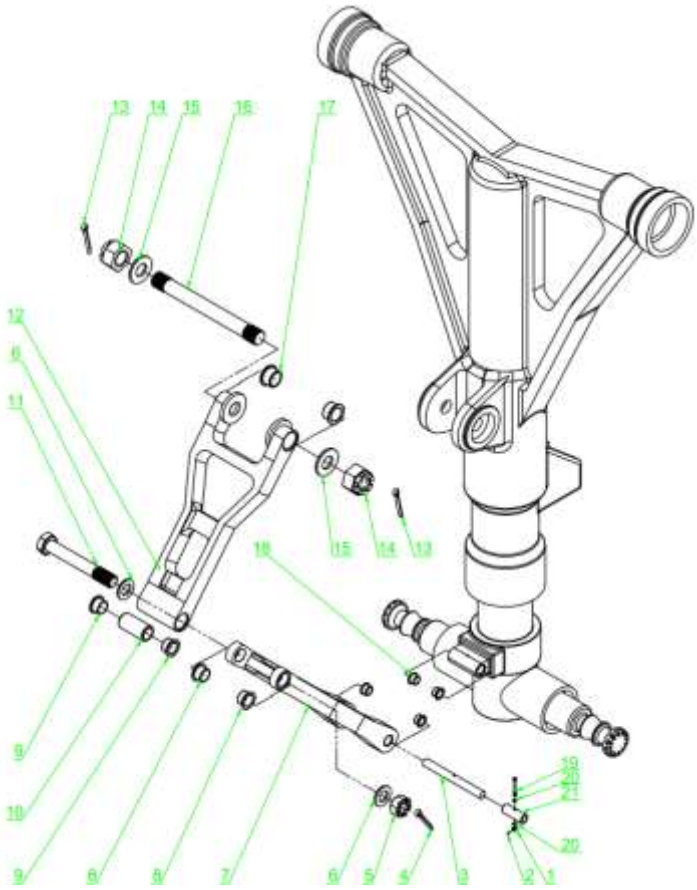

Figure 7-8. Lower-upper torque link assembly

7.5.3. Wheel assembly

The wheel consists of inner and outer halves secured together with bolts, washers, and nuts. The brake disc is attached to the wheel using bolts. The wheel rotates on two tapered roller bearings housed within bearing cups in the axle. Felt grease seals protect and retain the lubricant within the bearings.

❖ Assembly procedure:

The wheel is a split type comprising the inner wheel half (1) and outer wheel half (2), joined with tie bolts (5), washers (4), and nuts (6).

The brake disc (3) is mounted to the wheel using tie bolts. The wheel is of the tubed type. It rotates on two tapered roller bearings (10) seated in bearing cups (11) within the axle.

Grease seals (8 & 12) protect and retain lubrication for the bearings. Bearings are lubricated with appropriate grease. Remove the seals, lightly coat all surfaces with wheel bearing grease, and reinstall before use. In service, the axle cap is secured to the outer wheel half with three mounting screws.

CAUTION: COAT THE SEALS WITH GREASE. THEY MUST BE LUBRICATED TO PROTECT AND RETAIN LUBRICANT FOR THE BEARINGS. IF NOT PROPERLY LUBRICATED, MOISTURE MAY PENETRATE AND DAMAGE THE BEARINGS.

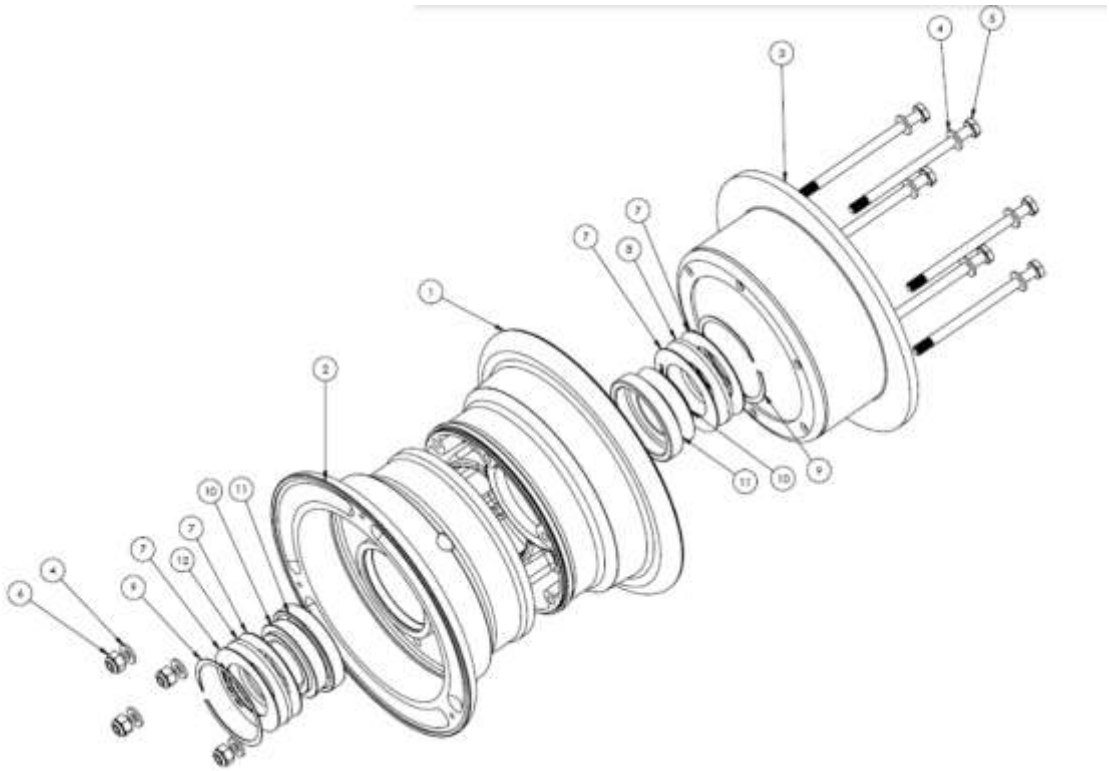

Figure 7-9. Wheel frame assembly

7.5.4. Brake assembly

The cylinder (1) is machined from aluminum alloy. Pistons (4) are housed within the cylinder and form the pressure chamber for brake fluid.

Two anchor bolts (2) are attached to the cylinder (1) with nuts (12) and washers (11). The anchor bolts slide or float through bushings in the anchor plate (6) and pressure plate (5), allowing the cylinder and pressure plate to self-align with the disc.

The backing plate (3) is fastened to the cylinder using bolts (9) and washers (10) on the opposite side of the brake disc. The backing plate and pressure plate each hold brake pads (13). The anchor plate is mounted to the landing gear axle. The brake caliper (cylinder assembly) includes the cylinder, pistons, backing plate, pressure plate, brake linings, and other related components.

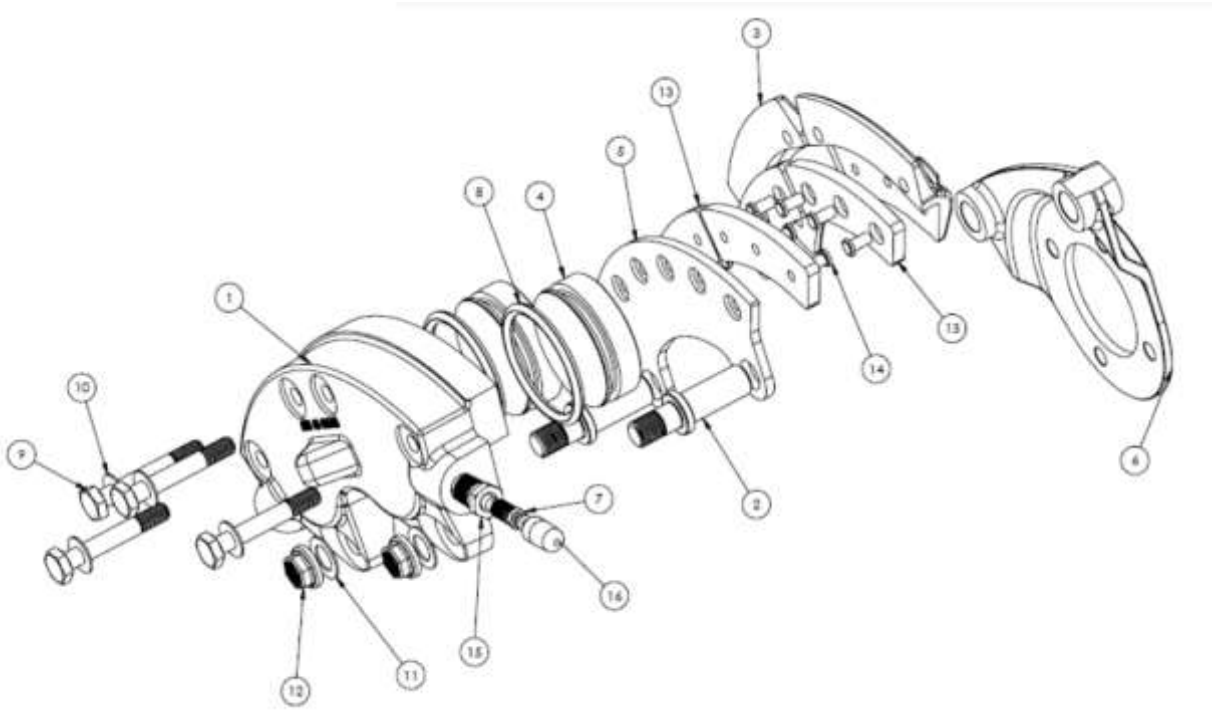

Figure 7-10. Brake assembly

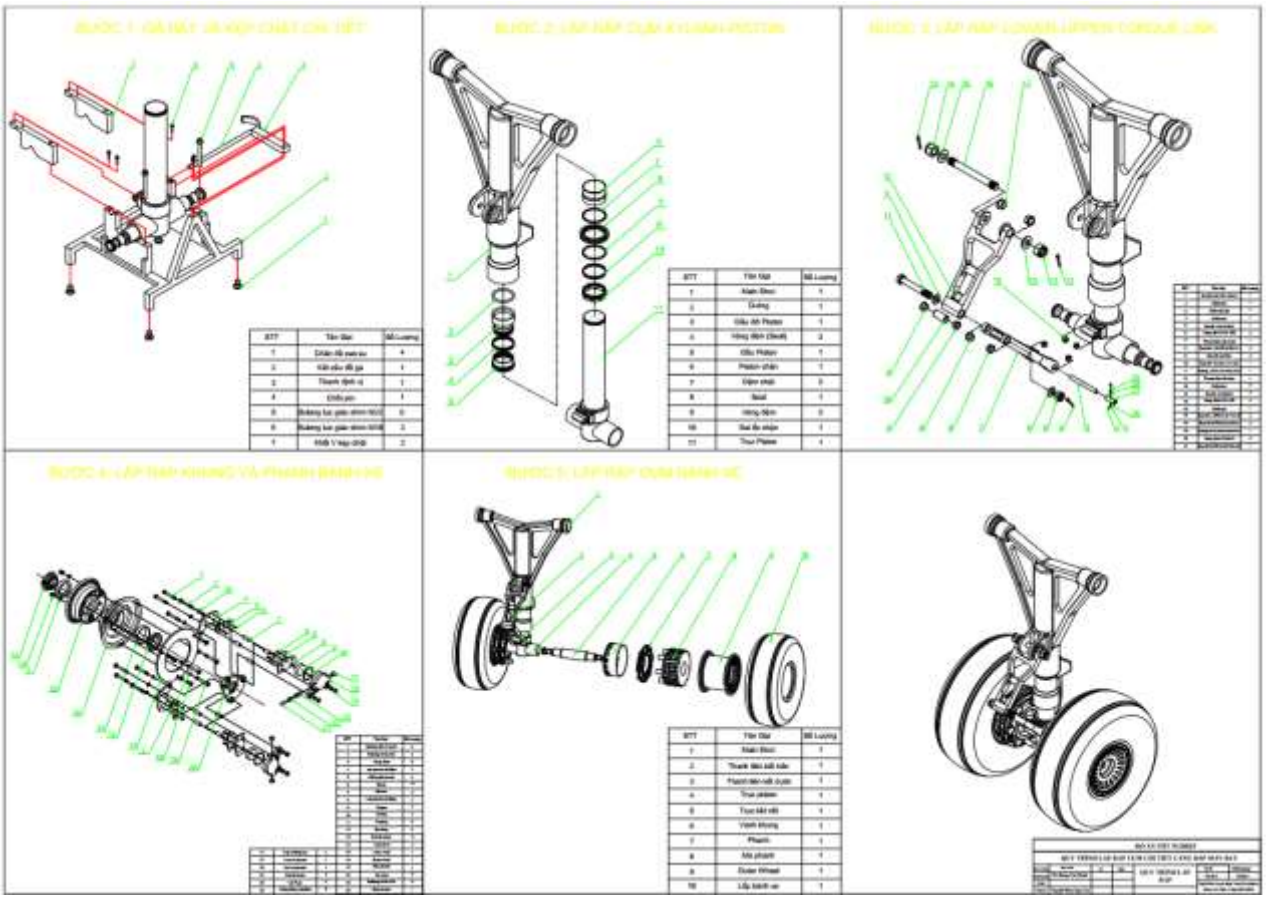

CONCLUSION

Through the research and implementation of the thesis "Design of the manufacturing and assembly process for the aircraft landing gear assembly," I have completed the development of a comprehensive technological process covering both machining and assembly stages. The project not only focuses on the design of machining and assembly procedures but also expands into optimization analysis to improve the real-world performance of the landing gear.

- Key achievements:

- Successfully designed a 3D model of the landing gear in accordance with aerodynamic principles, ensuring manufacturability and assembly feasibility.
- Developed a detailed manufacturing process that meets technical requirements, including material selection, machinery, tooling, and machining methods.
- Established an assembly procedure that satisfies assembly requirements, ensuring the subassembly is firmly mounted, properly aligned, and structurally stable.
- Simulated and analyzed the dynamic behavior of the landing gear, demonstrating the impact of applied loads on the system.

- Contributions of the thesis:

- The thesis provides a comprehensive and highly practical technological process that can be applied in actual manufacturing and assembly or serve as a foundation for further in-depth research.
- Provides reference data and models for educational institutions, research centers, or enterprises in the field of aerospace engineering

- Recommendations and proposals:

- a prototype should be manufactured based on the proposed design to experimentally validate the aerodynamic simulation results.
- it is necessary to invest further in more advanced simulation tools (such as multiphysics simulation and AI integration) to improve accuracy and optimize the design.
- it is recommended that technical training institutions include content related to the design, manufacturing, and assembly of landing gear in their curricula to meet the practical demands of the aerospace industry.
- it is proposed to promote collaboration between universities, enterprises, and research institutes to develop highly applicable landing gear products aimed at commercialization.

REFERENCES

[1] Luu Duc Binh, "*Kỹ thuật đo cơ khí*"

[2] Prof. Dr. Nguyen Đac Loc, Assoc. Prof. Dr. Le Van Tien, Assoc. Prof. Dr. Ninh Đuc Ton, Assoc. Prof. Dr. Tran Xuan Viet, "*Sổ tay Công nghệ chế tạo máy (tập 1)"*

[3] Prof. Dr. Nguyen Đac Loc, Assoc. Prof. Dr. Le Van Tien, Assoc. Prof. Dr. Ninh Đuc Ton, Assoc. Prof. Dr. Tran Xuan Viet, "*Sổ tay Công nghệ chế tạo máy (tập 2)"*

[4] Walter Tool Catalogue 2020

[5] Goodrich Aerospace Canada Ltd, "*Landing Systems – Landing Gear Component Maintenance Manual*"

[6] Seco, "*catalogue & hướng dẫn kỹ thuật 2021.2"*

[7] Mitsubishi Materials. Available: https://www.mitsubishicarbide.net/mhg/enuk/

[8] Shengyong Gan, Xingbo Fang, Xiaohui Wei, " Parametric Analysis on Landing Gear Strut Friction of Light Aircraft for Touchdown Performance"

[9] ABI-199-71 Wheel and Brake Kit Installation and ICA Manual

[10] Ddeakpeti, "*Boeing 767 Training Manual – 1992"*. Available: https://petersengineering.blogspot.com/2014/09/boeing-767-200-300-main-landing-gear.html

[11] https://www.slideshare.net/slideshow/landing-gear-247889940/247889940

[12] Iqnection. Available: https://bgmfg.com/from-ground-to-sky-the-critical-role-of-bolts-nuts-in-aerospace-engineering/. [Accessed July 15, 2024]

[13] https://americanprecisionassembly.com/capabilities/bushing-installation/

[14] internet: for translation purposes only, not for content reference.